COUPP E-961: 60 kg
R & D review

December 2008

Russ Rucinski, FNAL, Dec. 2008

COUPP E-961: 60 kg, R&D review

OUTLINE of presentation

- Mechanical Design of 60 kg detector
- Peripheral equipment
- Completion of Engineering run
- Future 6 months - Schedule
- Scaling to 500 kg – Engineering issues

COUPP - 60 Kg Bubble Chamber

Photo Credit: FNAL/VMS, Reidar Hahn

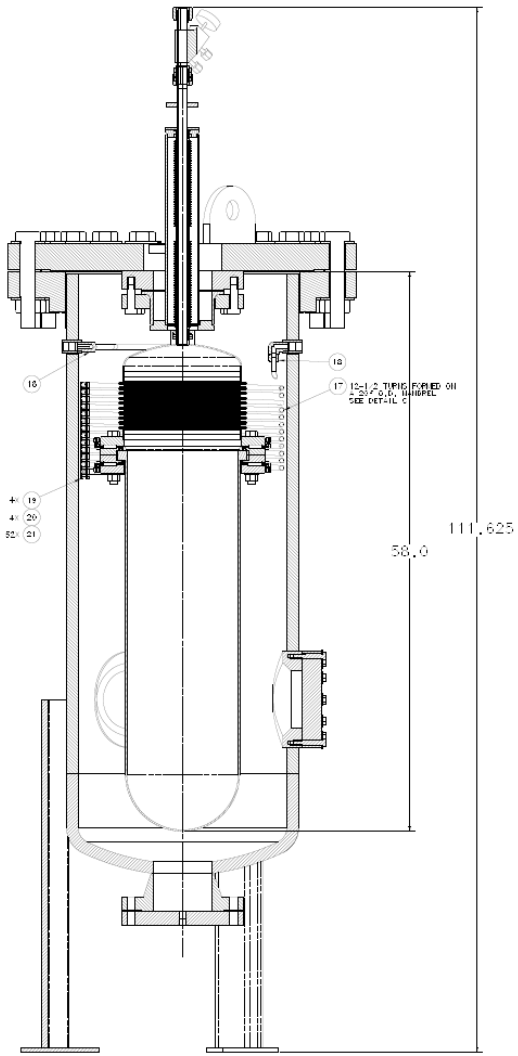

Russ Rucinski, FNAL, Dec. 2008

COUPP - 60 Kg Bubble Chamber, Mechanical Design

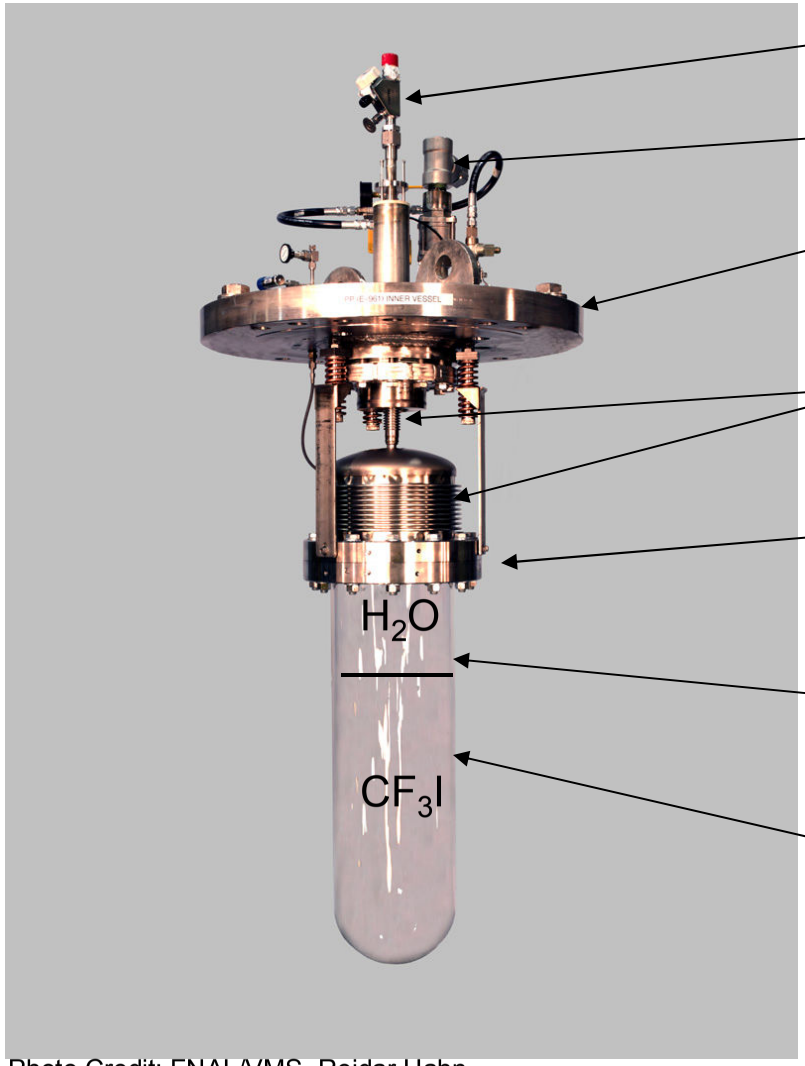

High purity valve seals volume

2” port for fast glycol pressurization

Lid of glycol vessel

Set of bellows for volume change
& expansion/compression of fluid

Quartz to Metal seal by gold wire + oring

Jar is stationary

Jar will contain ~ 80 kg (40 L) of CF3I
~ 40 kg (40 L) of H2O

Photo Credit: FNAL/VMS, Reidar Hahn

COUPP - 60 Kg Bubble Chamber, **Quartz Jar**

Fused silica jar
30 cm dia. X 1 meter long

Prototype Silica jars were procured from 2 vendors.
Technical Glass products (TGP), $ 3700
United Silica Products (US), 1 @ $3200 x 2 @ $2500

Flange has tight flatness tolerance and surface quality requirement. Both vendors met specification.

One Synthetically fused silica jar was delivered from Covalent Materials Corporation for $28,000. Synthetic fused silica is required for low background and high radiopurity.

Covalent can produce a larger jar for a 200 kg or 500 kg detector
(will discuss in detail later)

MECHANICAL DESIGN – Gold seal

- Glass to Metal seal
  - 0.030” Ø Gold wire
  - Flattened (at 75ft-lbs)

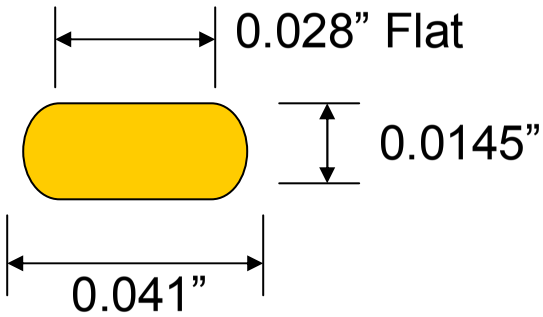

Picture below: Gold wire & O-ring on jar of flange

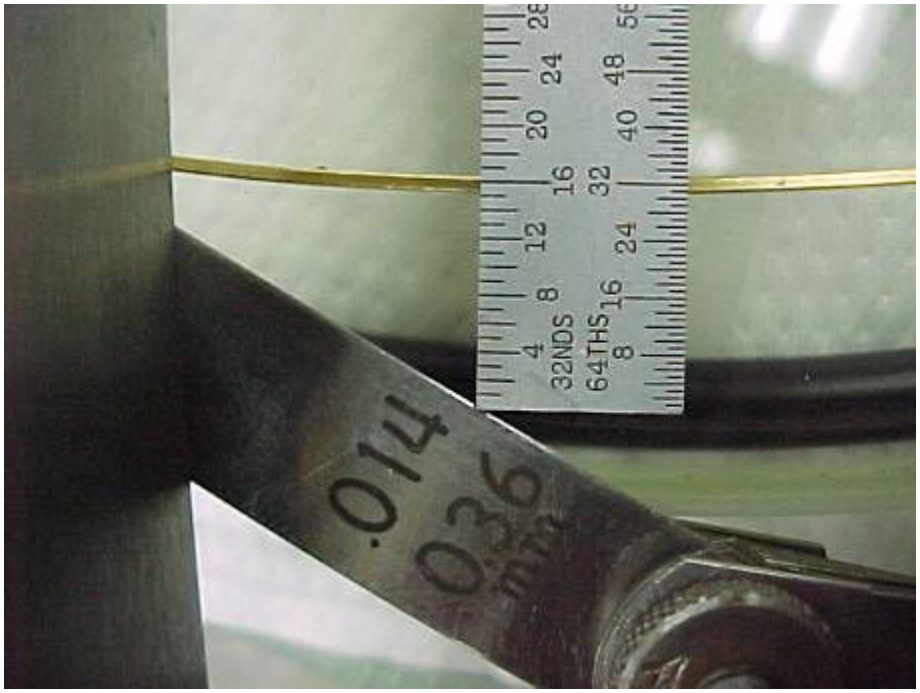

- Gold wire at inner perimeter, leak tight to 10E-6 mbar-l/s
- Viton O-ring at outer perimeter, leak tight to 10E-9 mbar-l/s

MECHANICAL DESIGN – Expansion Volume

(Shown horizontally)

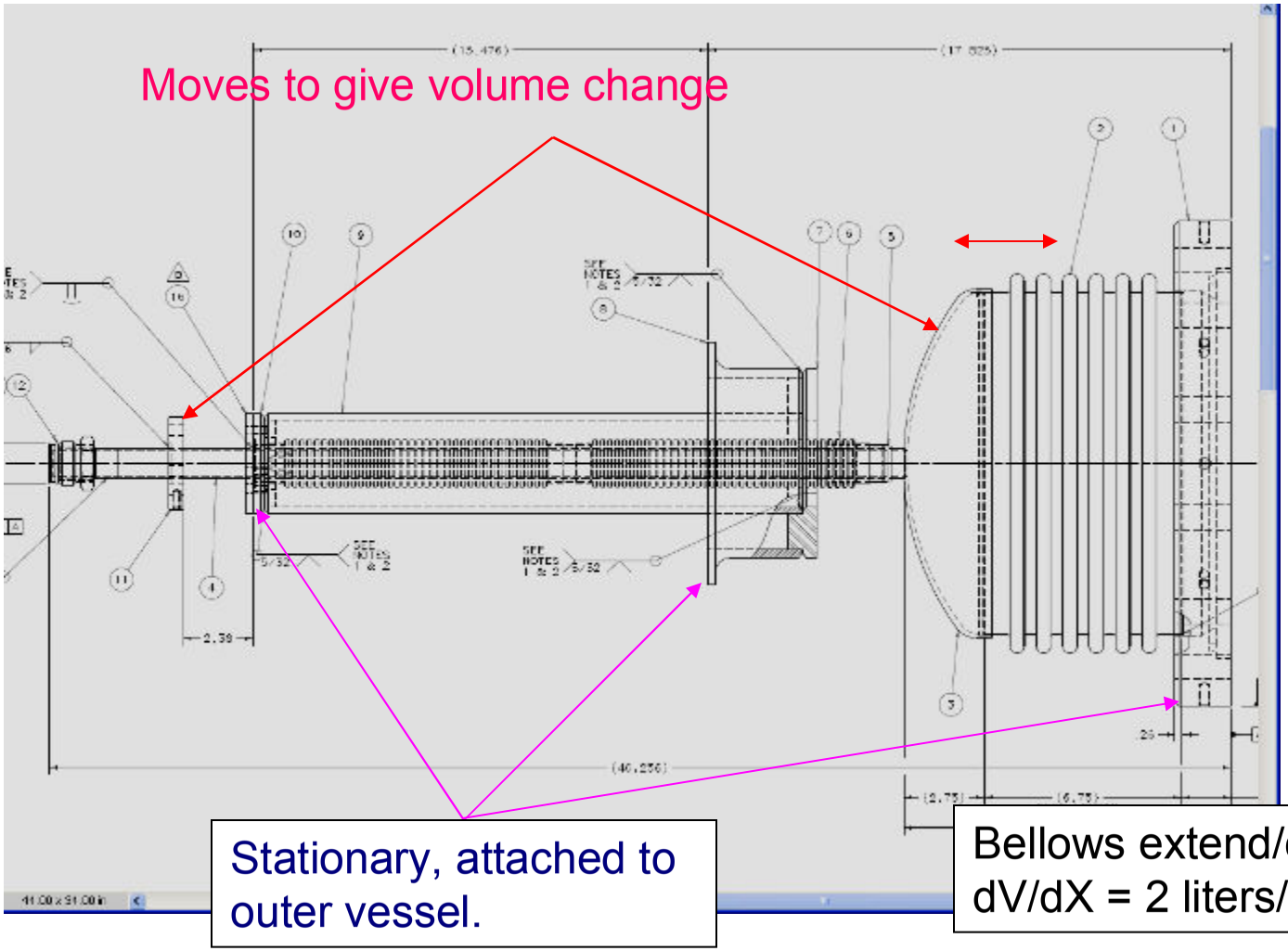

Quartz Jar attached here

Peripheral Equipment for E-961 60 kg Engineering run

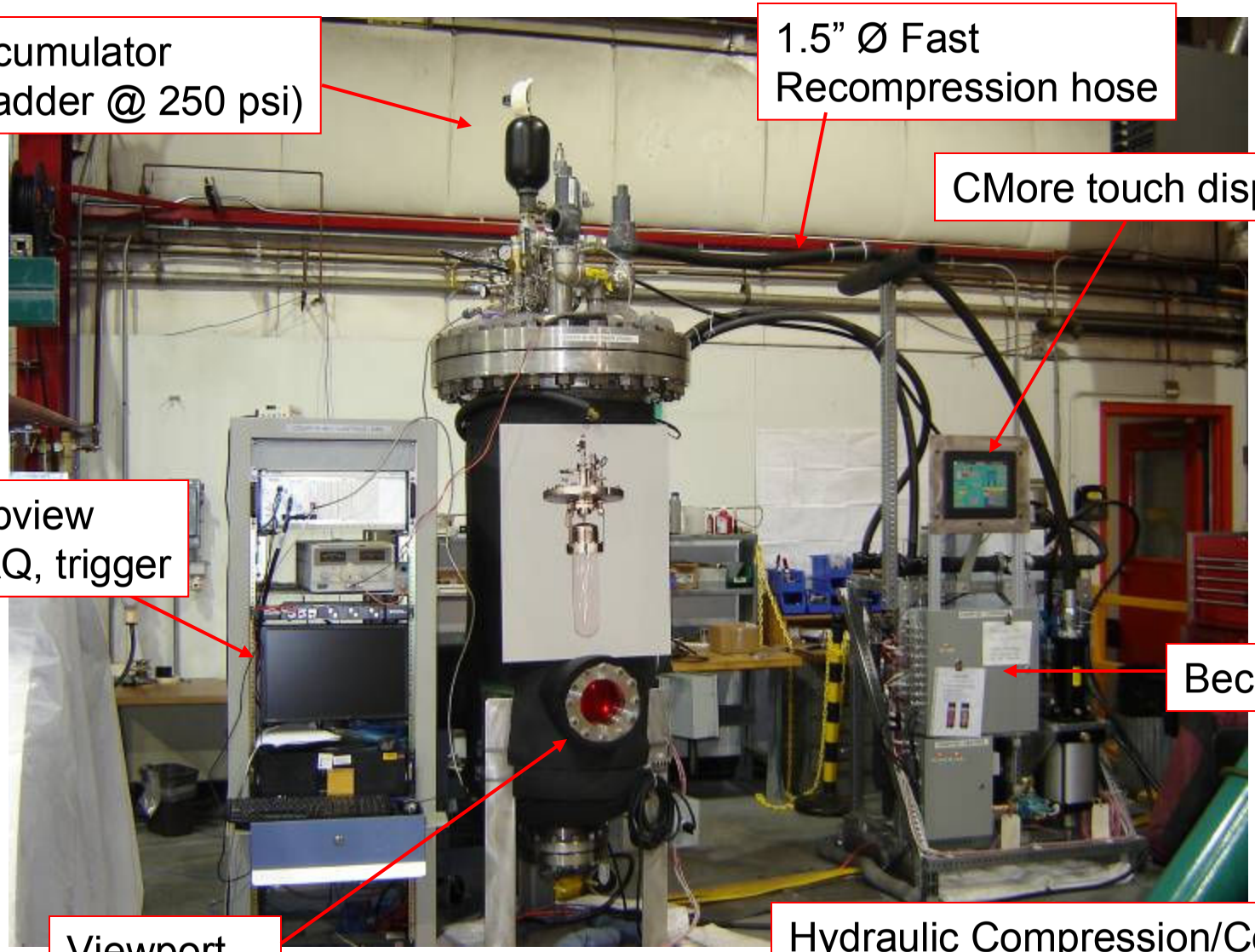

Peripheral Equipment – for next run

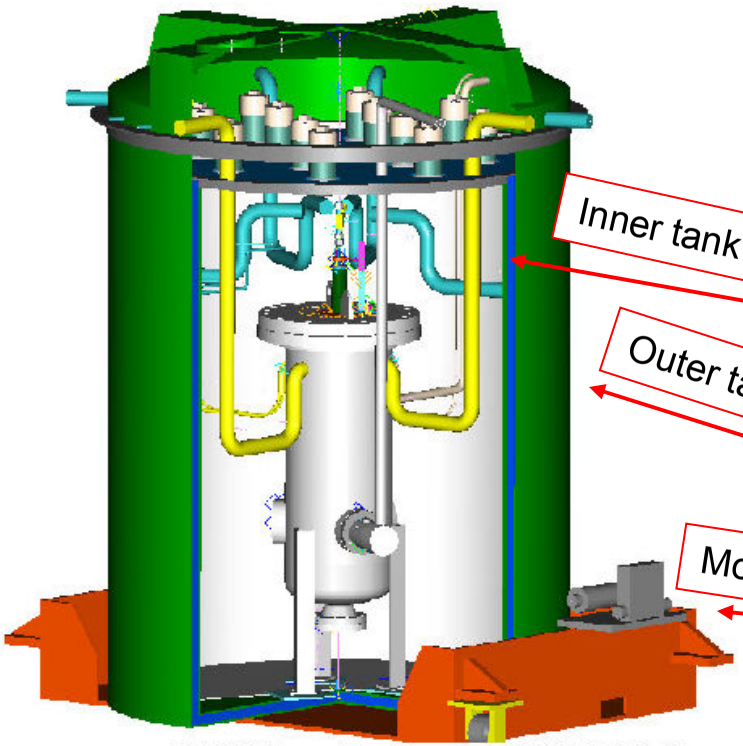

COUPP 60 kg vessel in water veto tank 10-22-08, D. Pushka

Muon veto/neutron shield – Dave Pushka & Eric Ramberg are working on this

Peripheral Equipment - Optics

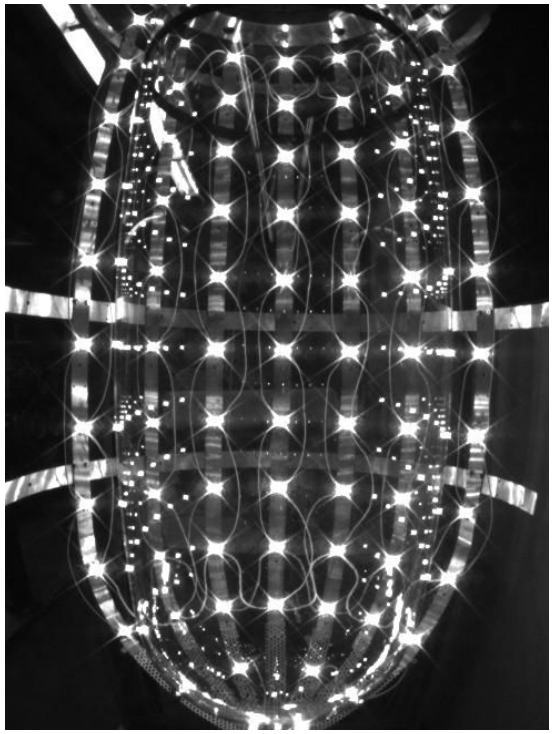

LED array behind jar

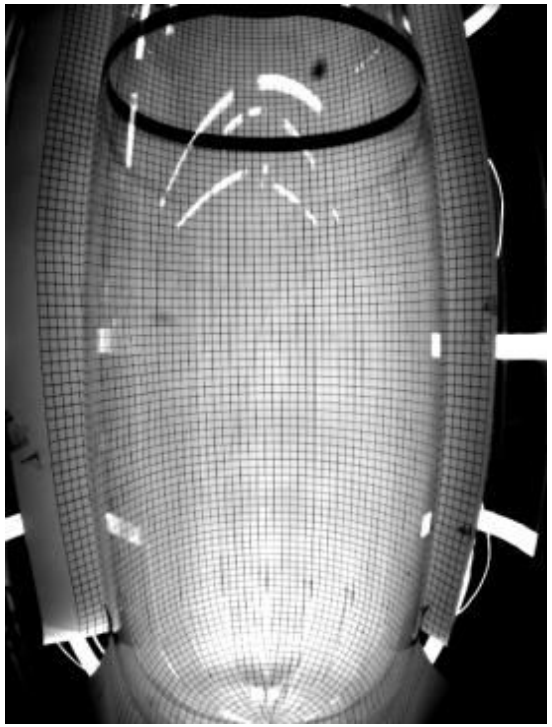

Diffuser with grid

Plus:
Camera mount,
Water tight enclosure,
Camera air cooling.
[Carl Lindenmeyer working on these]

Martin Hu working on LED/diffuser/optics

Other Peripherals

Low radiation background water source at Lab 3
– Need by Feb/March

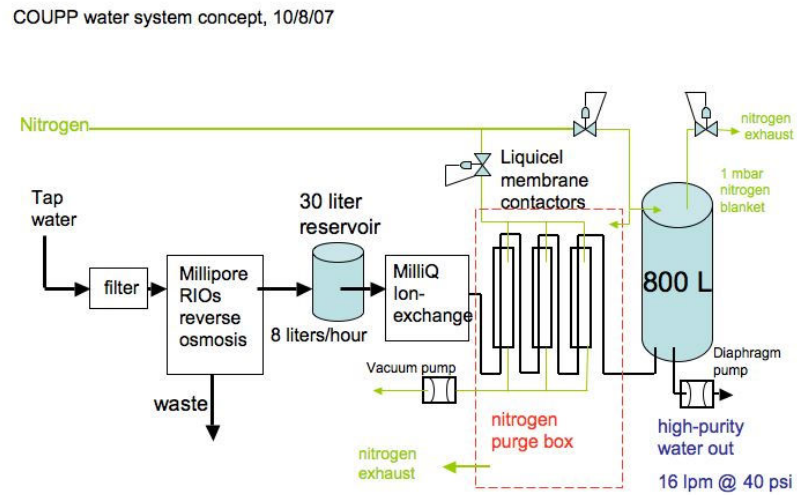

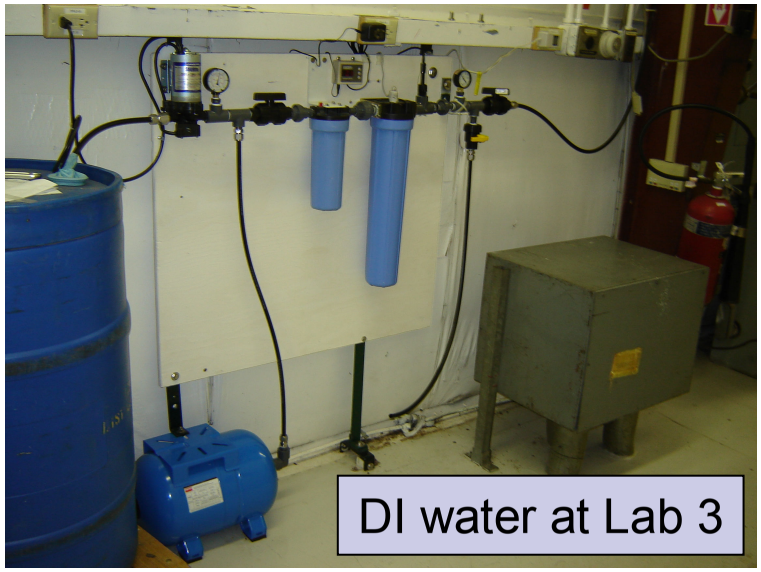

Other Peripherals

Lab 3 ISO class 4 (class 10) Cleanroom for assembly work

Class 10 area
10’ x 12’ x 9’ high

Gowning room class 100

Other Peripherals

CF3I & H2O Distillation & Purification handling Cart
(100 Liter vessels out for bid)

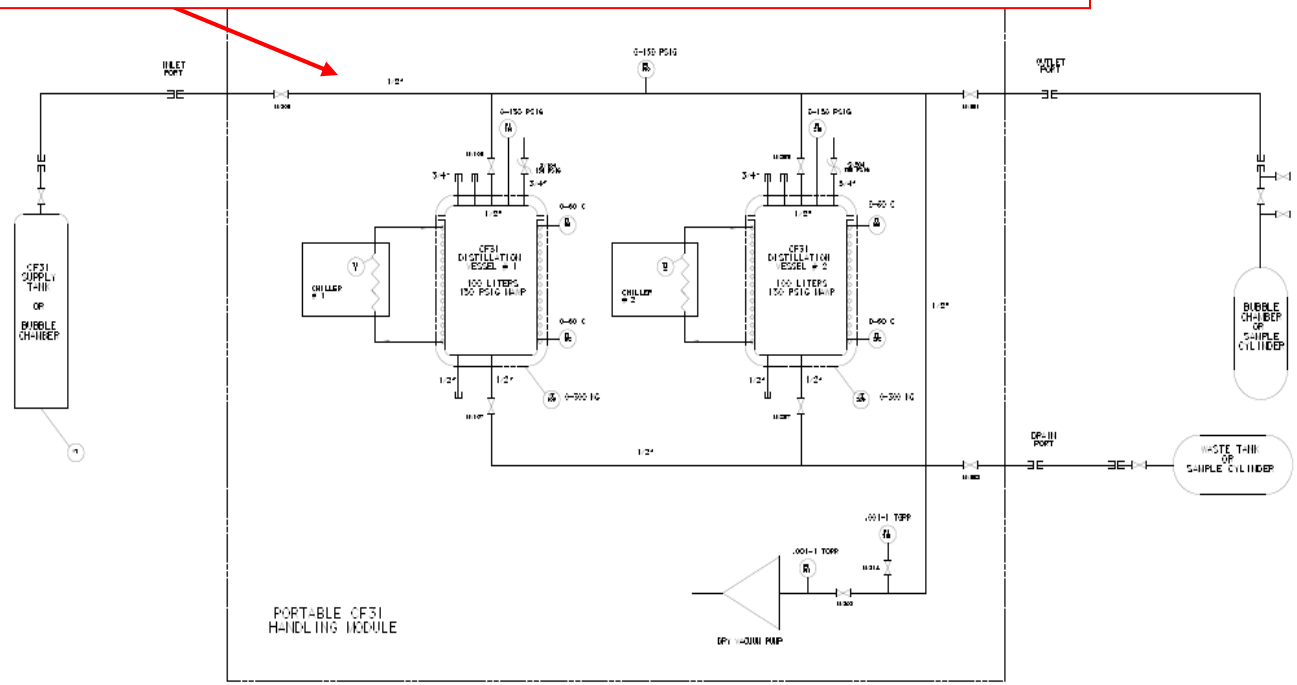

Also Resources:
Control System Engineering and Programming – Rich Schmitt
Mechanical Assembly, leak testing - Mark Ruschman
PAB support – Cary Kendziora

60 kg Engineering run: July-Nov '08 What we accomplished

- ✓ 60 kg mechanical prototype bubble chamber is functional.
- ✓ Control system and peripheral equipment were commissioned.
- ✓ Fast re-compression looks good, 100 msec. (Trace on next slide)
- ✓ Operating experience gained:
  - ✓ Filling, emptying, de-gassing, heating, cooling
  - ✓ Triggered fast re-compressions
  - ✓ Automatic unattended control
  - ✓ Communication between PLC and Labview/DAQ PC
- ✓ Temperature uniformity 0.1 C at 40 C

Engineering run: July-Nov '08

- CF3I bubble fast re-compression pressure trace

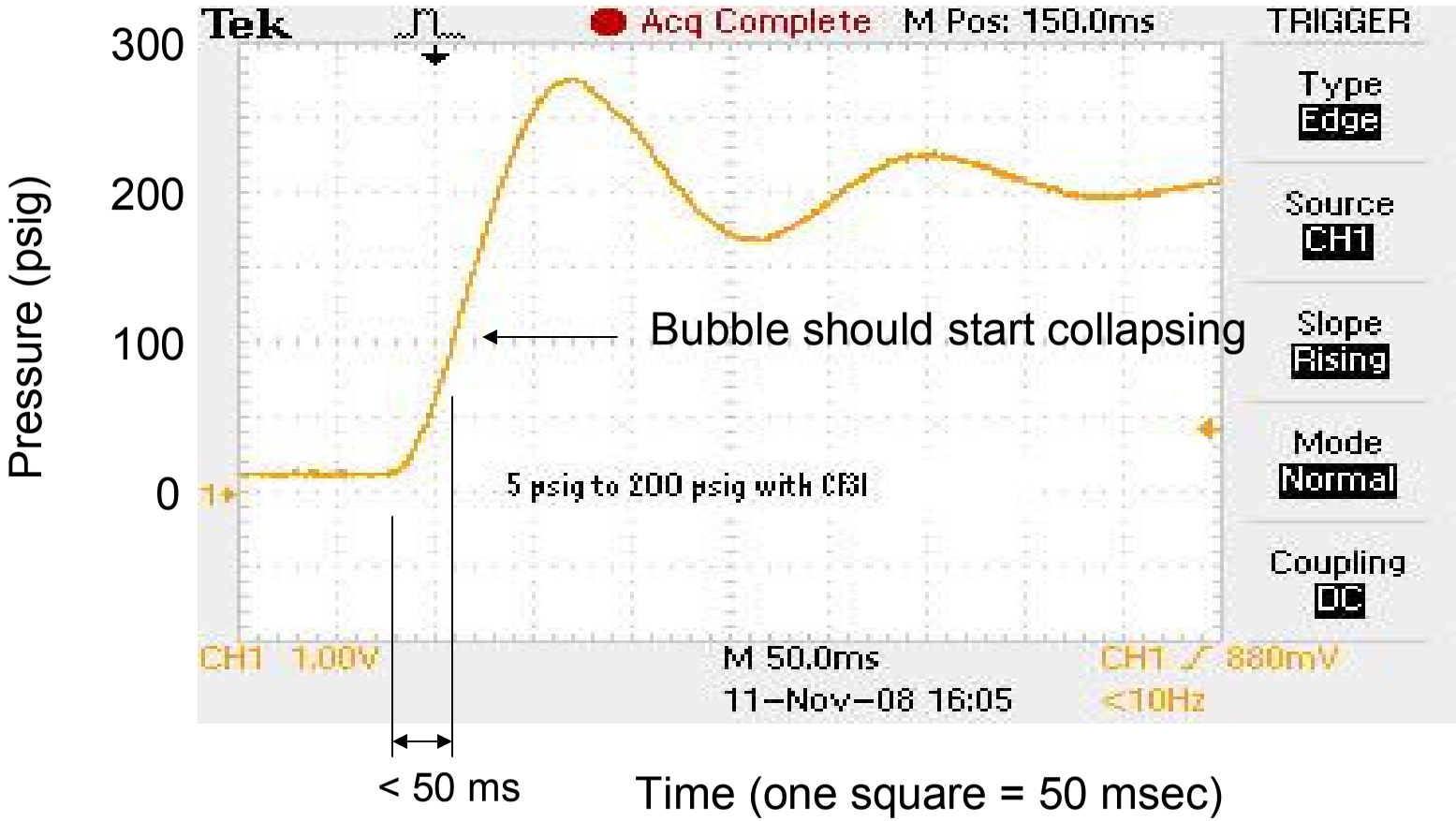

Future activities - Schedule

- December
  - Assemble and operate water tanks at LAB F
  - Install PMT's on water and see signals
  - Continue Optics development
  - Relocate Equipment to roll up door at PAB
- January - February
  - Move water tanks and cart to PAB
  - Lower vessel into tank and roll into PAB
  - Route piping and utilities out of tank
  - Obtain pORC to operate

Future activities - Schedule

- February - March
  - Operate at PAB with camera and DAQ
  - Fill water tank, operate submerged
  - Operate Veto system
- January - March
  - Clean and assemble high purity version
  - Operate and collect low rad water at Lab 3
  - Assemble distillation fluid handling cart
  - Distill low rad water into high purity version at Lab 3

Future activities - Schedule

- December thru Spring (in parallel)
  - Develop 500 kg detector or
  - Plan multiple smaller detectors
  - Deep underground site planning
- April thru May?
  - End operations at PAB
  - Move system to NUMI tunnel
  - Install High purity version in NUMI tunnel
  - Obtain pORC and start operations in NUMI tunnel
  - Start procuring for next detector

Scaling to 500 kg, Engineering Issues

- Synthetically fused Silica jar (The size drives design) (next slide)
- Glass to metal flange & seal design
- Expansion chamber bellows (design modification probable)
  - Larger dia. = thicker wall = stiffer = less flexibility = longer length (at the limit) = less stability…
- Handling provisions
  - Weight and size of assembly pieces
    - 200 lbs pieces versus 50 lbs now
    - 36" dia. Outer vessel vs. 24" dia. now
  - Cleaning facilities and methods

I don't believe these are show stoppers.

Synthetically fused silica jars

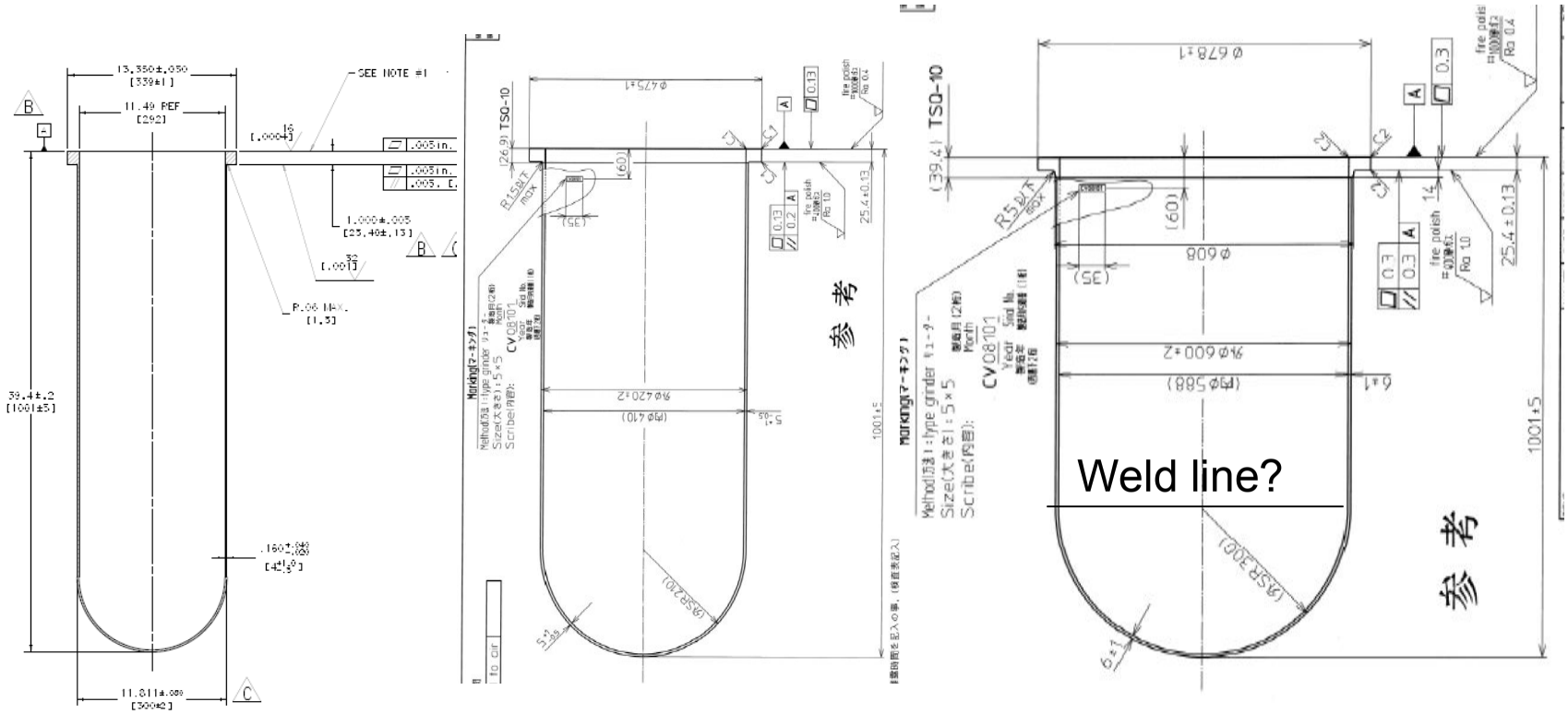

300 mm Ø jar
Delivered

420 mm Ø jar
Covalent proposal

600 mm Ø jar
Covalent proposal

Scaling

60 kg
to
500 kg

by the
numbers

Component	60 kg Ø 30 cm	200 kg Ø 42 cm	500 kg Ø 60 cm
Jar diameter (cm)	30	42	60
Jar wall thickness (mm)	4	5	6
Jar overall length (cm)	100	100	100
Jar empty mass (kg)	12	21	36
Jar empty weight (lbs.)	26	46	79
Jar CF3I height (cm)	65.3	80.5	95.7
Jar CF3I volume (liters)	41.5	99.5	237.9
CF3I mass (kg)	**83**	**199**	**475**
Outer vessel diameter (inches)	**24**	**30**	**36**
Outer vessel diameter (cm)	61.0	76.2	91.4
Outer vessel wall thickness (inches)	1.281	1.60125	1.9215
Outer vessel height (inches)	84	84	84
Outer vessel lid diameter (inches)	36	43	50
Outer vessel lid thickness (inches)	2.75	3.75	4.375
Outer vessel weight (lbs)	4000	6250	9000
Bolt diameter (inches)	1.5	1.75	2
Bolt torque (ft-lbs)	300	350	400
Backing flange outside diameter (in.)	17	22	30
Backing flange mass (kg)	24	47	96
Backing flange weight (lbs)	53	103	211
Empty bubble chamber weight (lbs)	**150**	**288**	**574**

Closing remarks

- The 60 kg Bubble Chamber is a reality.
- We will be commissioning the Integrated system (minus HP assembly) at PAB soon.
- We hope to move underground (w/HP) in late spring.
- Development of scaled up detector is starting and will require about the same level of resources.
- Future deep underground siting is also being pursued.

Supplementary Slides

- Mechanical Design details
- 3D modeling
- Additional Pictures

MECHANICAL DESIGN - Materials

- Purity provisions
  - Non-thoriated electrodes were used on both inner and outer vessels welds.
  - All welds are interior fusion welds of parent material with some E308 weld rod only when required.
  - Flanges are type 304L stainless steel.
  - Bellows is type 321 SS, non-thoriated welds, alcohol cleaned and dry GN2 packaged from factory.
  - Dished head is a sanitary grade head made of type 316L SS with 32 micro-inch finish on the interior.
  - 1” OD x 0.065 tube is type 316L SS, seamless, bright annealed, with 20 micro-inch finish on the interior.
  - Valve is Carten “ultra high purity” high flow bellows valve. It has purge ports that will be useful for operations.
  - Connections at valve are Swagelok VCR fittings using un-plated stainless steel metal gaskets.

MECHANICAL DESIGN – BC support hangers

- Three hangers are used. Each bracket is backed by stiff die springs (K=2500 lb/in) on either side. (K' = 7500 lb/in)
- The die springs are initially compressed. The upper one pushes down 160 lbs, the lower one pushes up 210 lbs. The empty weight of the vessel is 150 lbs.

MECHANICAL DESIGN – BC support hangers

- Horizontal orientation was also considered.
- At 1 G loading, tip of quartz jar deflects downward 0.28” because of spring deflections.
- Tube at upper bellows moves up 0.095” (okay since we have 0.125” clearance)
- Horizontal loading, full of water and under vacuum needs to be further analyzed.

MECHANICAL DESIGN – BC support hangers

1 inch vertical drop,

V_o=sqrt [2 g h] = sqrt [2* 386 in/s^2* 1 in] = 28 in/s

Limit inside acceleration to 10 G's

$f_n \leq A_o$ * (61.4) / V_o = 10G * 61.4 / 28 in/s = 22 Hz or less

Required deflection across support

$d \geq 9.8 * A_o / (f_n)^2$ = 0.2 inches

1G = 150 lbs, 10 G's = 1500 lbs.

Deflection 10 G's = 1500 lbs / (7500 lbs / in) = 0.2 inches.

Natural frequency, f_n = 3.13*sqrt(K'/W) = 3.13*sqrt(7500/150) = 22 Hz

Critical frequency to stay away from is 3 Hz to 7 Hz for transportation.

MECHANICAL DESIGN - Gold Seal

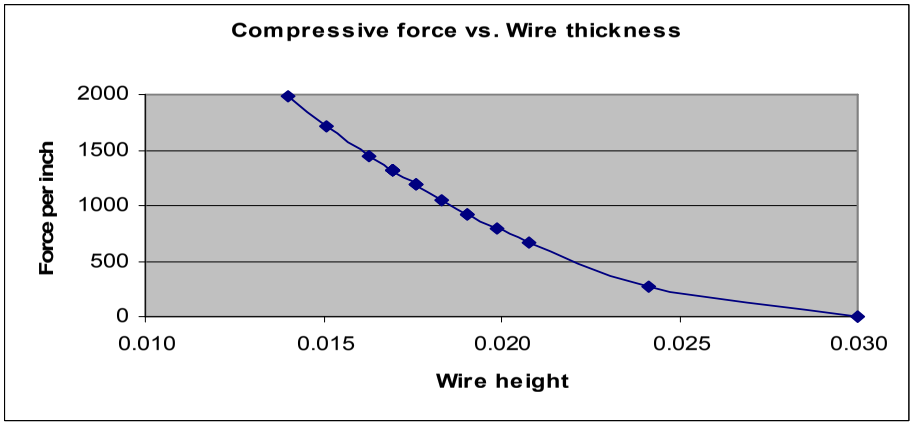

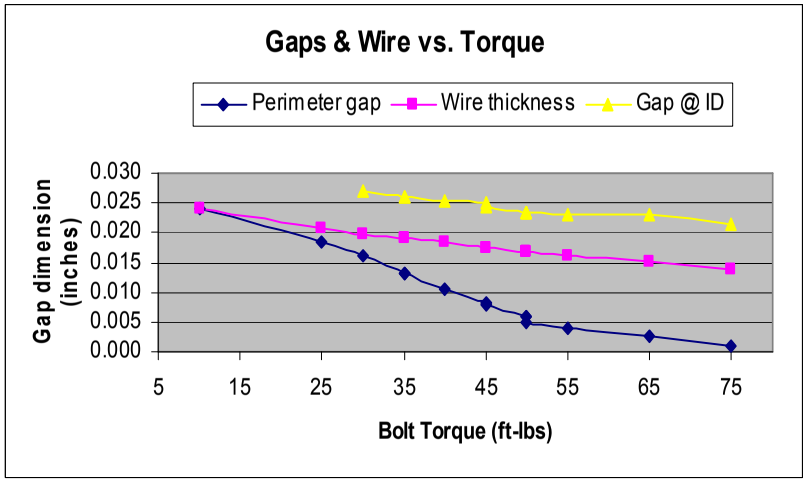

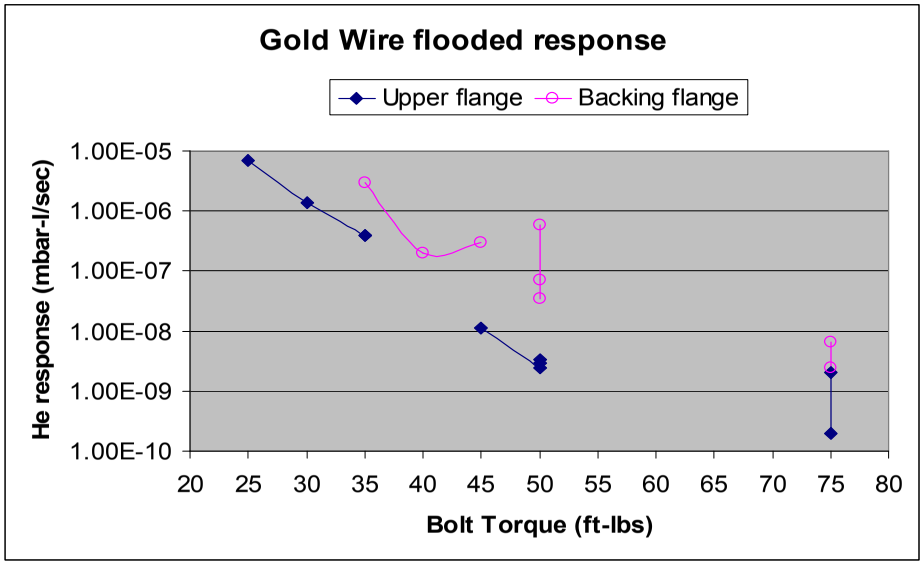

Gold seal leak rate is better than

10E-6 mbar-l/s at 40 ft-lbs

Viton seal better than 1E-09 mbar-l/s.

40 ft-lbs used for Mechanical prototype

MECHANICAL DESIGN – Expansion Volume

- Expansion Chamber
  - Bellows pair allows for a 4+ liter volume change, 2” travel.
  - Quartz Jar and its flange remains stationary.
  - Main portion sticking out lid remains stationary.
  - Stop plate attached to tube and the valve move up and down.

Lower bellows 12” ID x 5.0” free convoluted length. K = 192 lb/inch

Upper bellows 1.3” ID x 18” free convoluted length, 23.5” OAL.
K = 81 lb/inch

MECHANICAL DESIGN – Expansion Volume

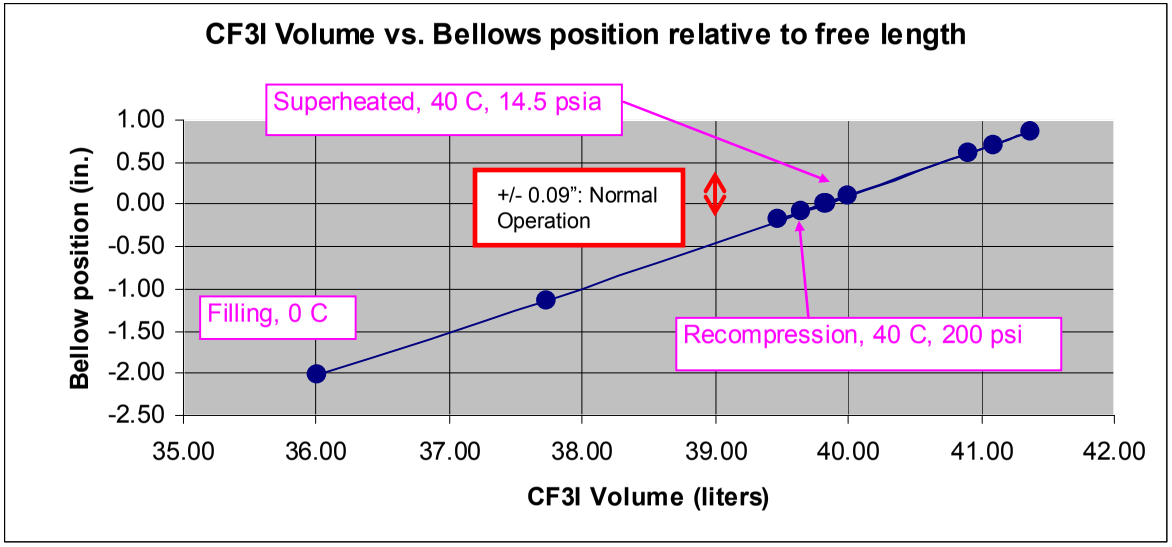

The chamber nominally holds 40 liters CF_3I & 43 liters of H_2O

Operating Condition	Temp (Celcius)	Pressure (Mpa)	CF3I Pressure (psia)	**Bellows Position (inches)**	Glycol Pressure (psia)	**Pressure Differential Outer to inner (psid)**
Fill	1	0.4	58.0	-2.03	63.1	5.1
Room temp.	20	0.425	61.6	-1.14	64.9	3.2
Operating Temp. - saturated	40	0.72985	105.9	0.01	107.2	1.3
Operating - cocked	40	0.1	14.5	0.09	14.3	-0.2
Operating - midpoint	40	0.8	116.0	0.00	117.5	1.5
Operating - recompression	40	1.5	217.6	-0.09	220.7	3.2
Aux. operating - saturated	50	0.9324	135.2	0.71	135.4	0.2
Aux. operating - cocked	50	0.1	14.5	0.85	12.6	-1.9
Aux. operating - recompression	50	1.5	217.6	0.61	219.2	1.6
Relieving point of outer vessel	1	2.172	315.0	-0.18	319.8	4.8

MECHANICAL DESIGN – Outer vessel

- Shell lengthened by 20” and lid porting done by Val-Fab.
- Lid pressure rating decreased from 600 psig to 450 psig.
- Vessel as a whole is rated for 450 psig.

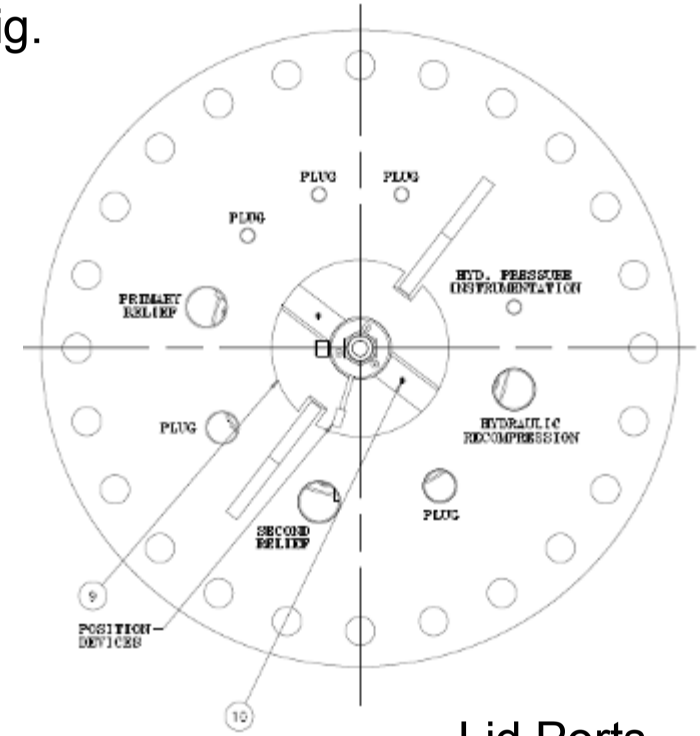

Lid Ports

Construction Status – Jan. 8th, the move

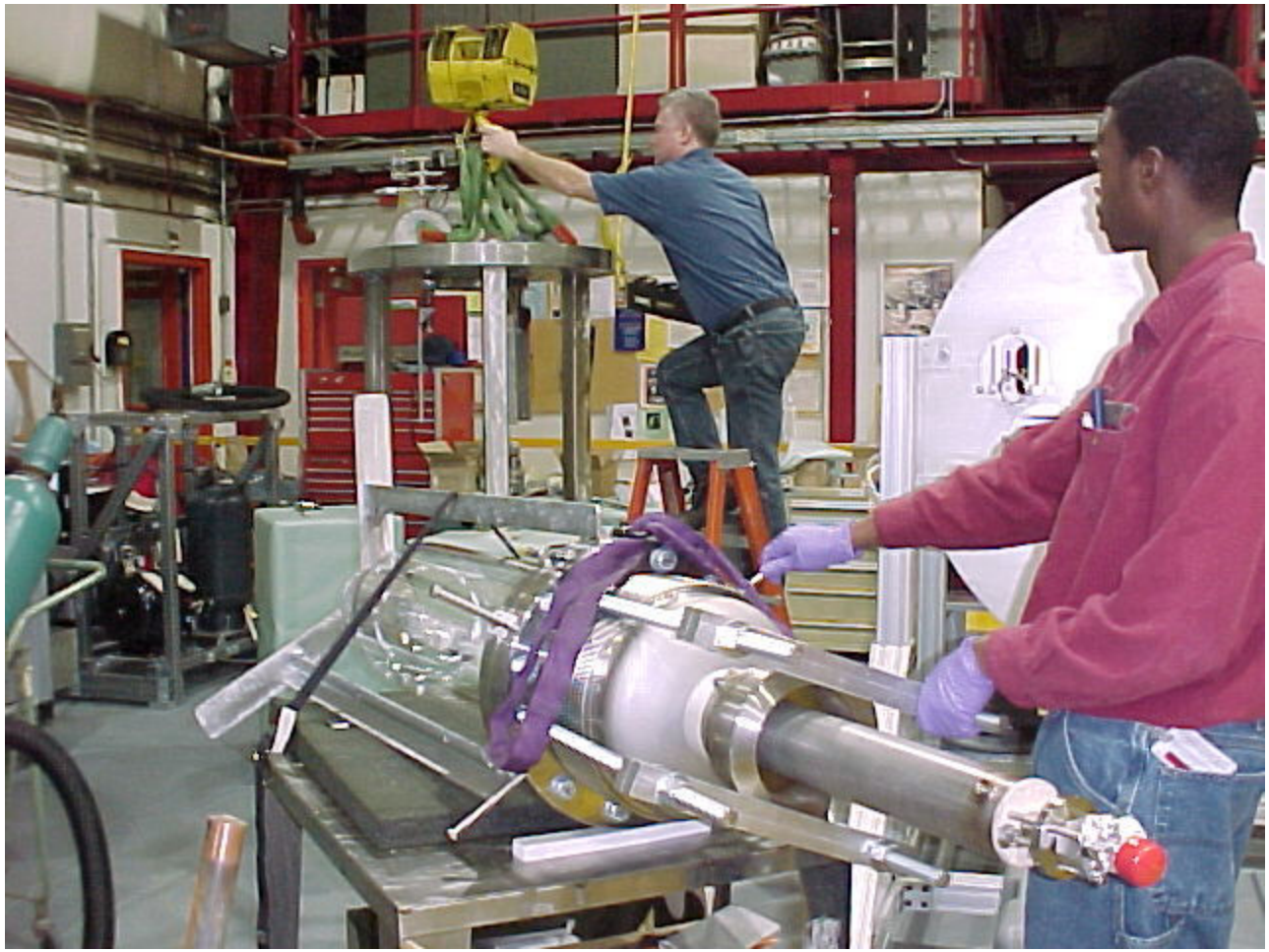

Early Construction pictures

Early assembly pictures – January/Feb. 08

COUPP - 60 Kg Bubble Chamber

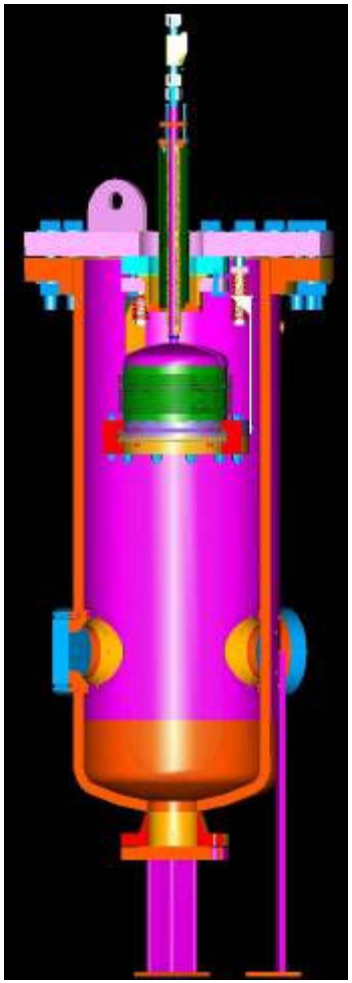

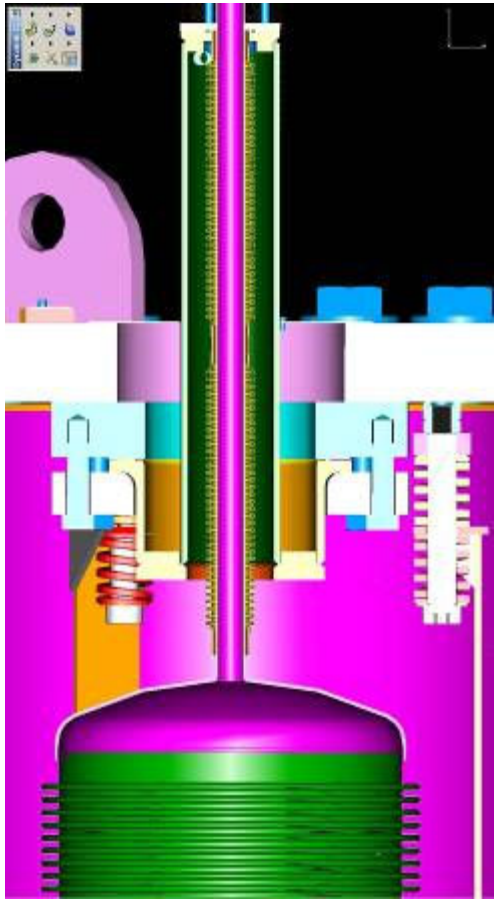

Solid Model

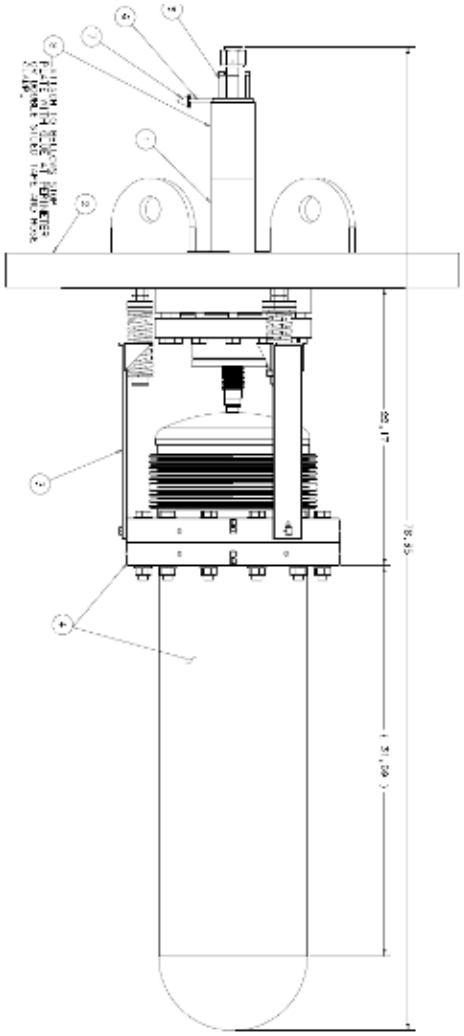

Assembly Drawing