GammeV

Gamma to milli-eV particle search

Next phase: the search for chameleons

Today: we are asking PPD to allow for some engineering and technical effort towards mechanical and electronics design. Over the next 6-8 weeks, we would make progress and coordinate with other divisions and be prepared for a review. Already, we have a fairly good estimate of required resources (M&S+labor) based upon GammeV I.

GammeV: Results

PRL 100, 080402 (2008) PHYSICAL REVIEW LETTERS week ending 29 FEBRUARY 2008

Search for Axionlike Particles Using a Variable-Baseline Photon-Regeneration Technique

A. S. Chou,[1,2] W. Wester,[1] A. Baumbaugh,[1] H. R. Gustafson,[3] Y. Irizarry-Valle,[1] P. O. Mazur,[1] J. H. Steffen,[1] R. Tomlin,[1] X. Yang,[1] and J. Yoo[1]

[1]*Fermi National Accelerator Laboratory, P.O. Box 500, Batavia, Illinois 60510, USA*
[2]*Center for Cosmology and Particle Physics, New York University, 4 Washington Place, New York, New York 10003, USA*
[3]*Department of Physics, University of Michigan, 450 Church Street, Ann Arbor, Michigan 48109, USA*
(Received 24 December 2007; published 25 February 2008)

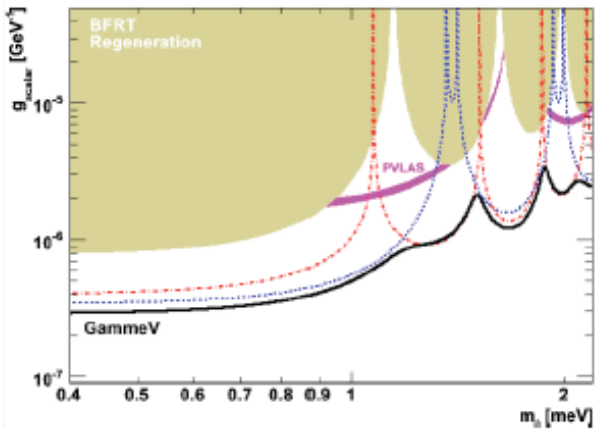

Rules out anomalous PVLAS signal.
Limits also set on photon-paraphoton coupling.

PRL 102, 030402 (2009) PHYSICAL REVIEW LETTERS week ending 23 JANUARY 2009

Search for Chameleon Particles Using a Photon-Regeneration Technique

A. S. Chou,[1] W. Wester,[2] A. Baumbaugh,[2] H. R. Gustafson,[3] Y. Irizarry-Valle,[2] P. O. Mazur,[2] J. H. Steffen,[2] R. Tomlin,[2] A. Upadhye,[4] A. Weltman,[5,6] X. Yang,[2] and J. Yoo[2]

[1]*Center for Cosmology and Particle Physics, New York University, 4 Washington Place, New York, New York 10003, USA*
[2]*Fermi National Accelerator Laboratory, P.O. Box 500, Batavia, Illinois 60510, USA*
[3]*Department of Physics, University of Michigan, 450 Church Street, Ann Arbor, Michigan 48109, USA*
[4]*Kavli Institute for Cosmological Physics, University of Chicago, Illinois 60637, USA*
[5]*Department of Applied Mathematics and Theoretical Physics, Cambridge CB2 0WA, United Kingdom*
[6]*Cosmology and Gravity Group, University of Cape Town, Rondebosch, Private Bag, 7700 South Africa*
(Received 1 August 2008; published 22 January 2009)

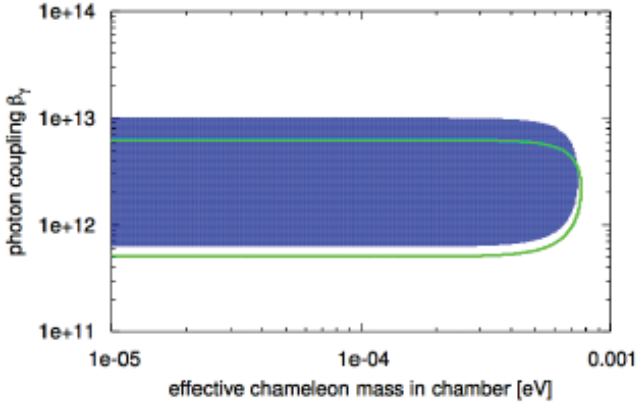

First-ever laser search for chameleons.
Upgrade with improved vacuum is planned.

Goal: Extend the Chameleon Limits

- Extend the region of validity of the limits.

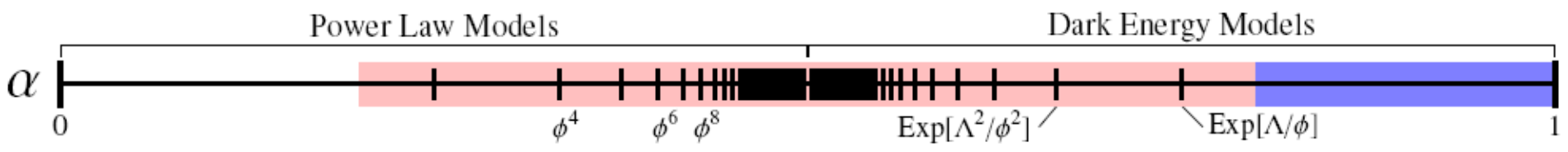

- Extend the sensitivity in coupling vs mass

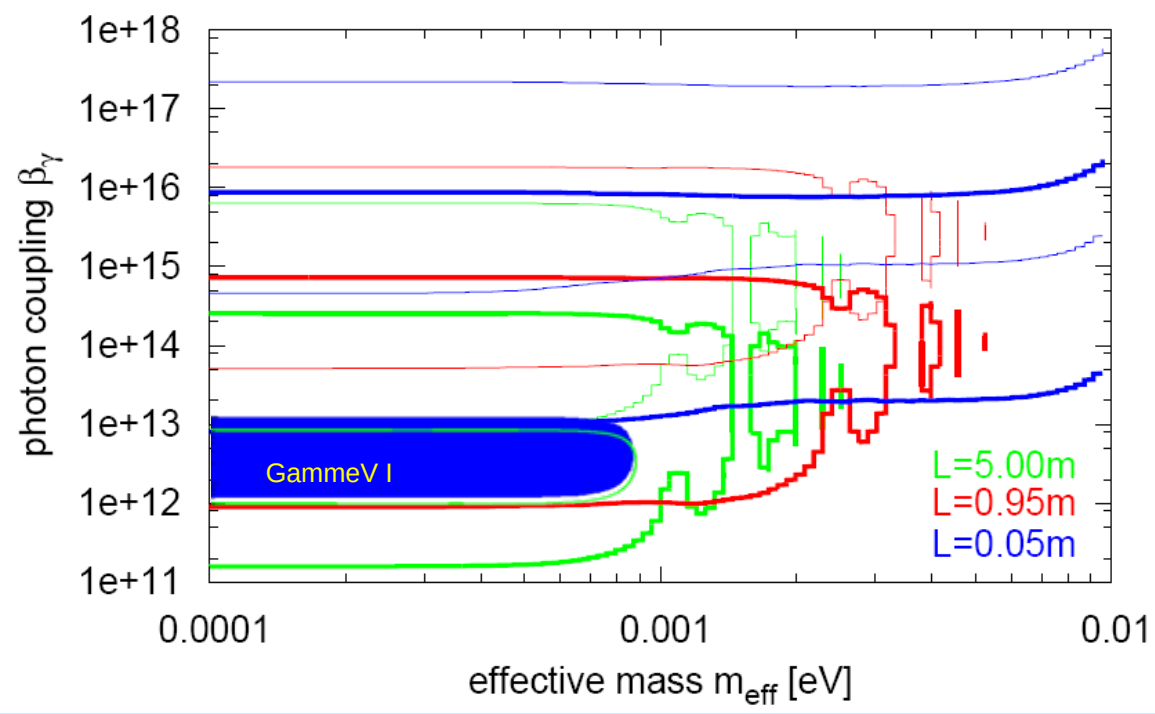

"Particle in a Jar"

- Chameleon properties depend on their environment – effective mass increases when encountering matter.
  - A laser in a magnetic field might have photons that convert into chameleons which reflect off of the optical windows. A gas of chameleons are trapped in a jar.
  - Turn off the laser and look for an afterglow as some of the chameleons convert back into detectable photons.

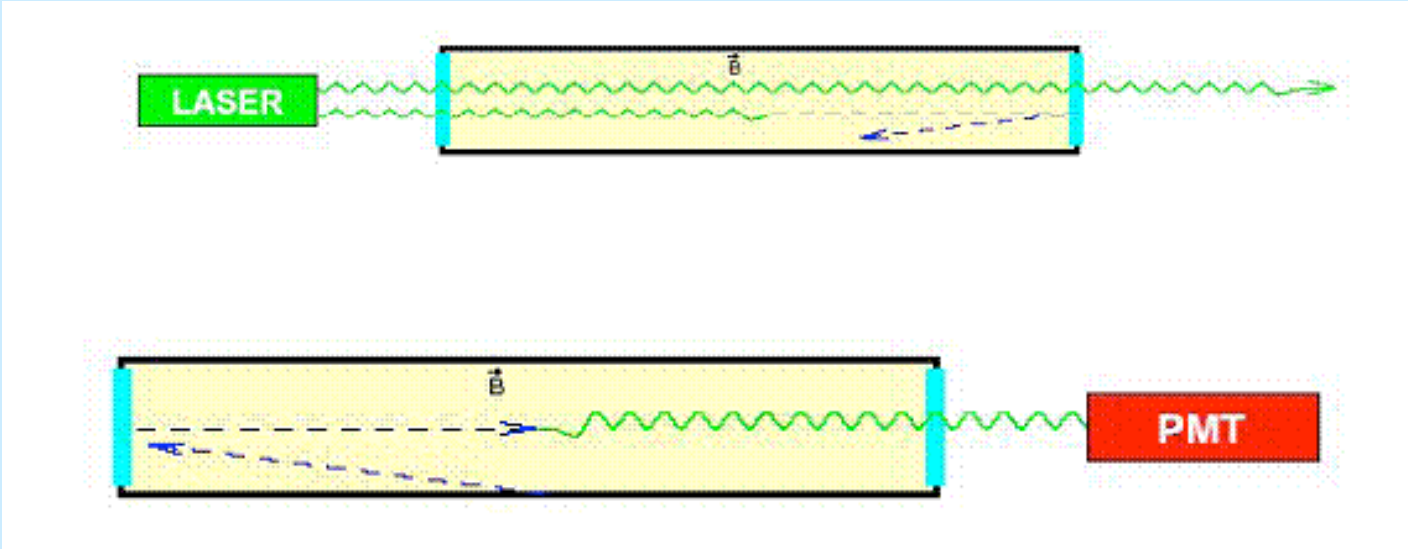

Apparatus

- GammeV I
  - Plunger

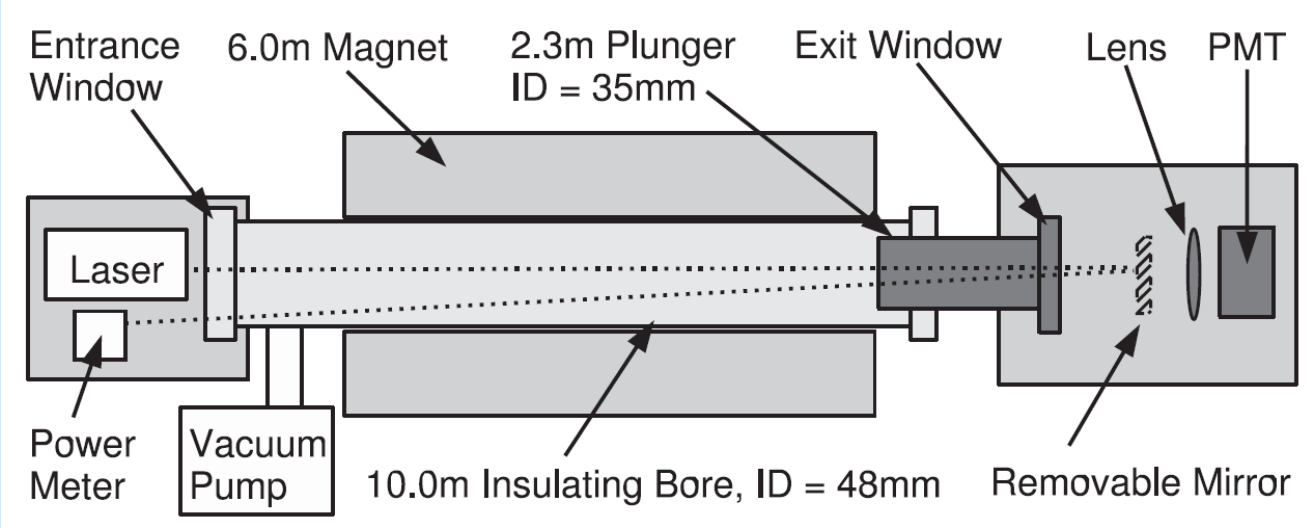

- GammeV II
  - dish rack
  - UHV and monitor
  - shutters/ gate valves

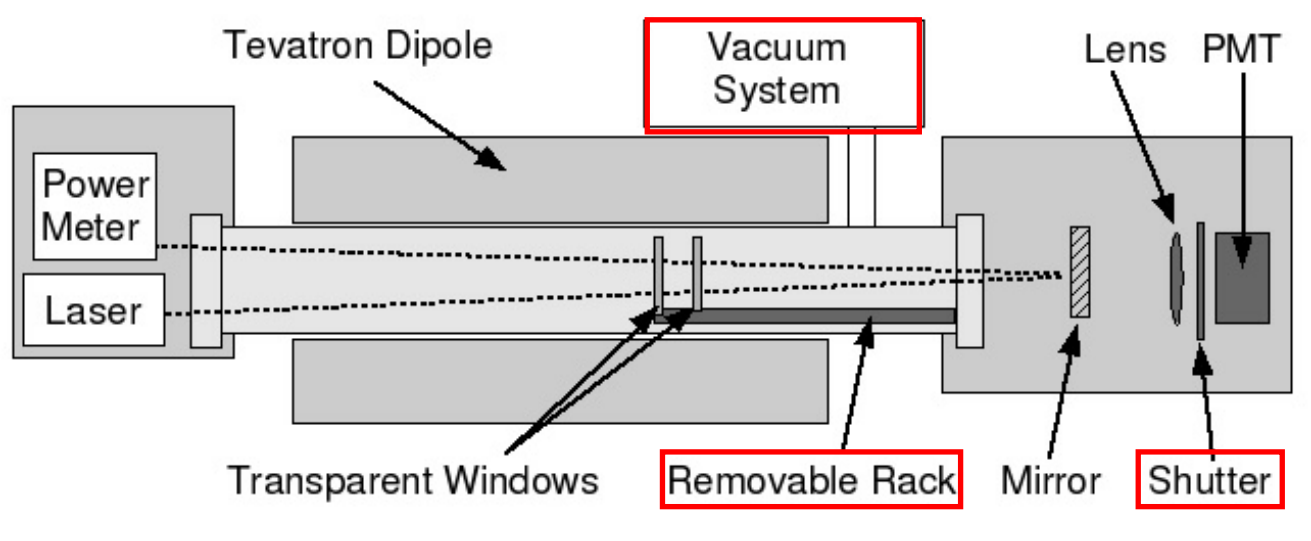

Apparatus

Gamme**V** was located on a test stand at Fermilab's Maget Test Facility. Two shifts/day of cryogenic operations were supported.

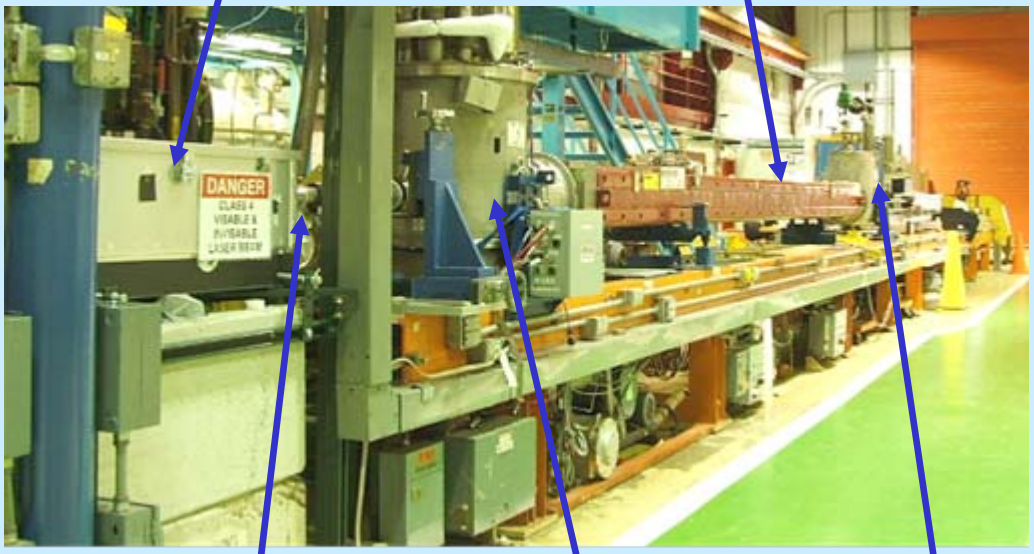

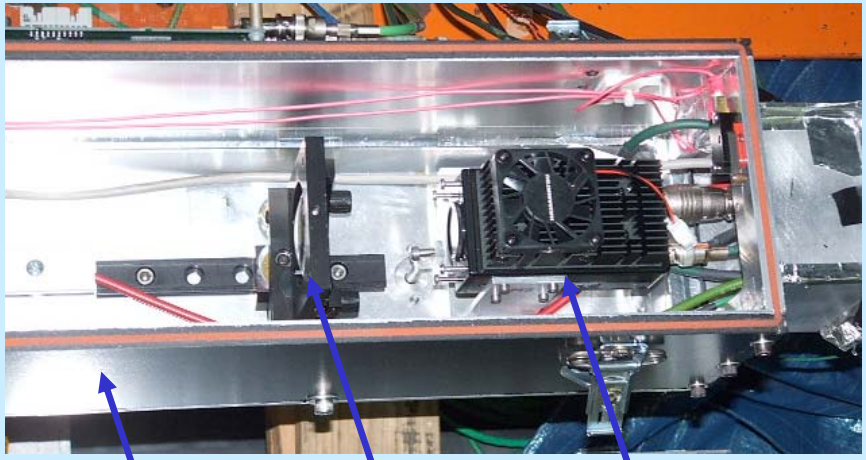

Vacuum system

- Requirements:
  - 10^{-8} Torr or better throughout the chamber
  - No direct connection to displacement pumps
- Implementation: cryo-cooling w/ monitoring

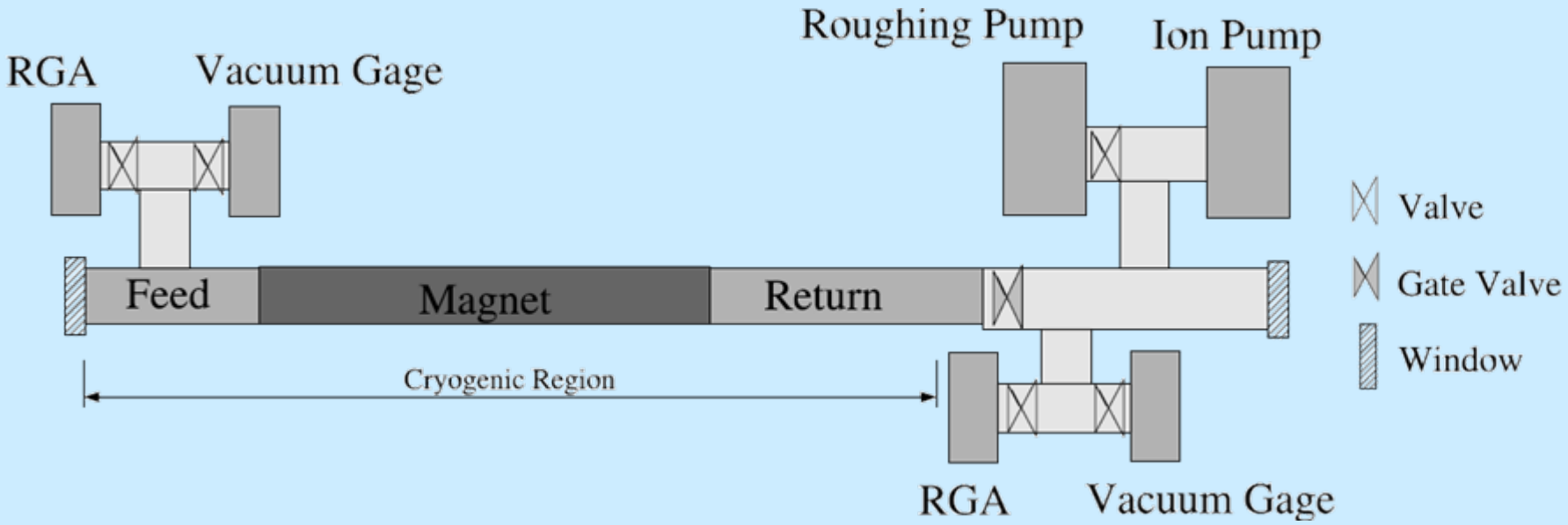

The "dish rack"

- Requirements:
  - Hold windows at defined positions in magnet
  - Compatible with cryogenics and vacuum system
- Implementation:
  - Likely stainless with insulating standoffs
  - Windows standard optics catalog item

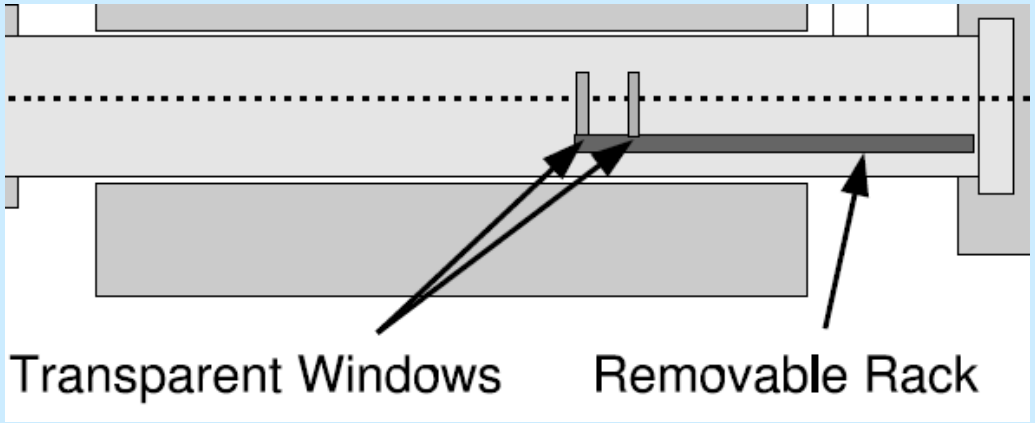

Laser box

- Laser box:
  - Use existing box on 3x3 optical table
  - Use the same laser from Acc. Div.
  - Need to re-do uni-strut support/clamp

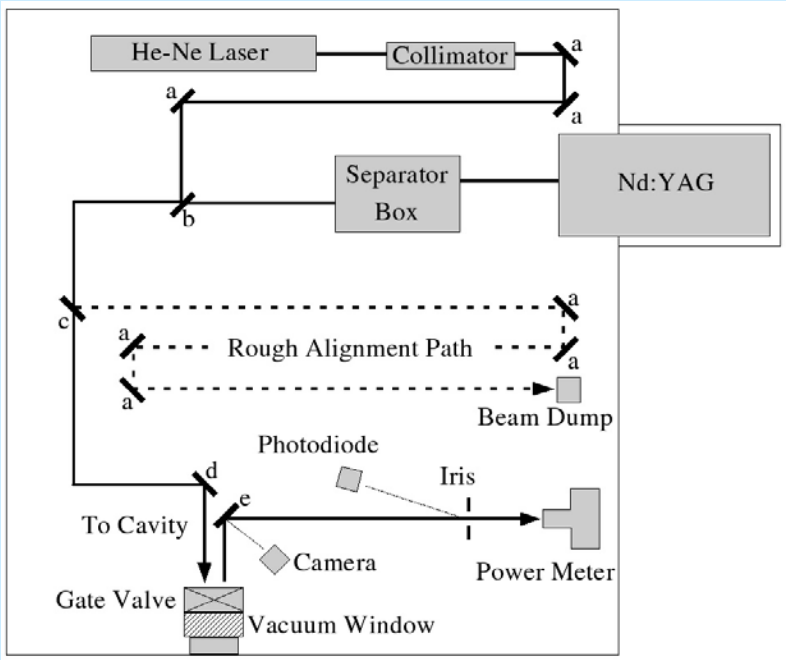

Other mechanical items

- PMT box:
  - Re-design. No movable plunger mechanism.
  - Have procured small optical table (surplus).

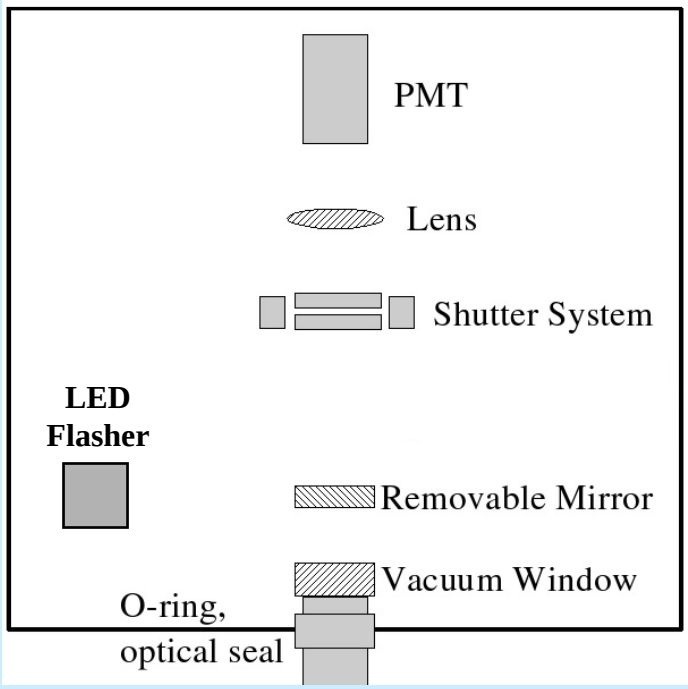

- Vacuum piping/flanges/interfaces:
  - Details (diameters) need work – design is simple – many parts off the shelf.
  - Ultra-high vacuum methods and practices.

Electronics items

- Data acquisition card:
  - Design new PC board based upon QuarkNet boards. Allows for us to make use of fast rise of the PMT and to distinguish double pulses.
- Other electronics items:
  - Re-use safety interlock design.
  - Re-use existing off-the shelf components.
- DAQ software:
  - Development of GammeV-chameleon software will be based upon existing GammeV software for PMT readout with QuarkNet board.

M&S

- GammeV I was $10K optics, $10K mechanical, and $10K PMTs and electronics.
- GammeV chameleon
  - Optics $8K for new frequency doubling crystal and separator box, new optical windows, remote control flip mirror, remote control shutter.
  - Mechanical $7K for vacuum materials and components. We hope to borrow gate valve.
  - Electronics $5K for new PCB and other electronics.
- Total M&S: $20K + $10K contingency

Labor

- Mechanical: Estimate 2/3 effort required as laser box was 1/3 previous effort
  - For GammeV, Lab 8 personnel engaged from April-June with 50% time devoted to COUPP.
- Electronics: Estimate 2/3 of effort since DAQ software is existing. New PCB design should be based upon existing QuarkNet
  - For GammeV, Sten consulted and helped with QuarkNet board modifications.
  - Al Baumbaugh wrote DAQ software and was engaged in the collaboration.

Labor is expensive

- Full costing of GammeV acknowledges PPD's generous contribution. We will again rely on Tech Div and Acc Div for magnet and laser support.
- We are also able to assume a lower priority where we don't fully consume resources granted for our project.

HOURS			
Task #	Expenditure Type	Job title	Total
40.47.01	TIME WORKED -MONTHLY	Engineer III	10.40
		Engineering Associate Sr	280.40
		Fabrication Specialist	34.00
		Operations Specialist, Sr	351.60
		Scientist I	1,133.60
		Sr Engineering Physicist	903.20
	TIME WORKED -MONTHLY Total		2,713.20
	TIME WORKED -WEEKLY	Design Drafter	29.00
		Designer	32.00
		Senior Technician	347.00
		Technical Specialist	574.00
		Technician I	4.00
	TIME WORKED -WEEKLY Total		986.00
40.47.01 Total hours			3,699.20
	Total hours	3,699.2	
	Total Labor costs w/ opto/vac/fringe	247,139.65	
	Total Labor costs w/ opto/vac/fringe/indirect	388,996.62	

Schedule

- March-April: Mechanical/Electrical design and procurement of some items including doubling crystal and separator box (<~$5K).
- Early May: Review with MOU between divisions. (Test beam model?)
- May-July: Procure and Assemble apparatus
- August: Install at the magnet test facility and commission
- September: Take Data with magnet on conditions
  - Run plan of magnet time required and magnetic fields requires 20 hours. We'll ask for twice this and with overheads of starting/stopping, we should be done in 2-3 weeks.
- Analysis and paper writing. Target early 2010 for submission.

- Summary: Scope of GammeV-chameleon is estimated to be about 2/3 of GammeV both in costs and efforts.