Holometer and Axion R&D

Current Status and
Initial Request for 2011 PPD Resources

W. Wester and A. Chou

Particle Physics Division and

Fermilab Center for Particle Astrophysics

Holometer Overview

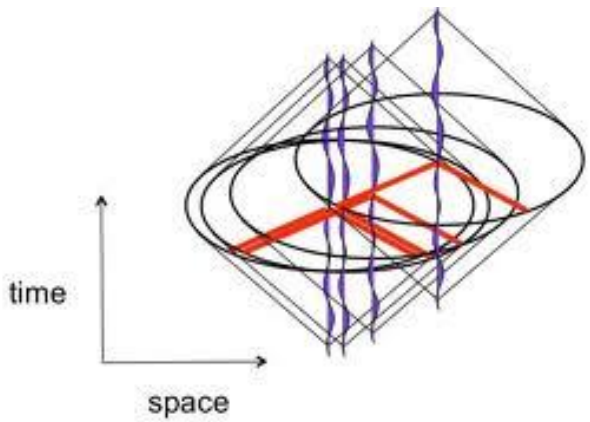

- New prediction that there could be observables due to Planck scale limits … specifically a small jitter in the apparent position of a beam splitter.
- Measure that position of a beam splitter using gravity wave interferometer techniques to get to ~10^{-17}m precision.
  - At higher frequencies (100s KHz – few MHz), well above the sub 1KHz region where ground motion noise dominates. Mechanical requirements less stringent than GW experiments.
  - Optical requirements have similar constraints as gravity wave experiments (perhaps a little easier since our optics are smaller)
- Look for: (1) correlated noise signal between two nearby interferometers, (2) frequency spectrum of that noise, and (3) that noise to de-correlate in a predicted manner.

Basic Configuration

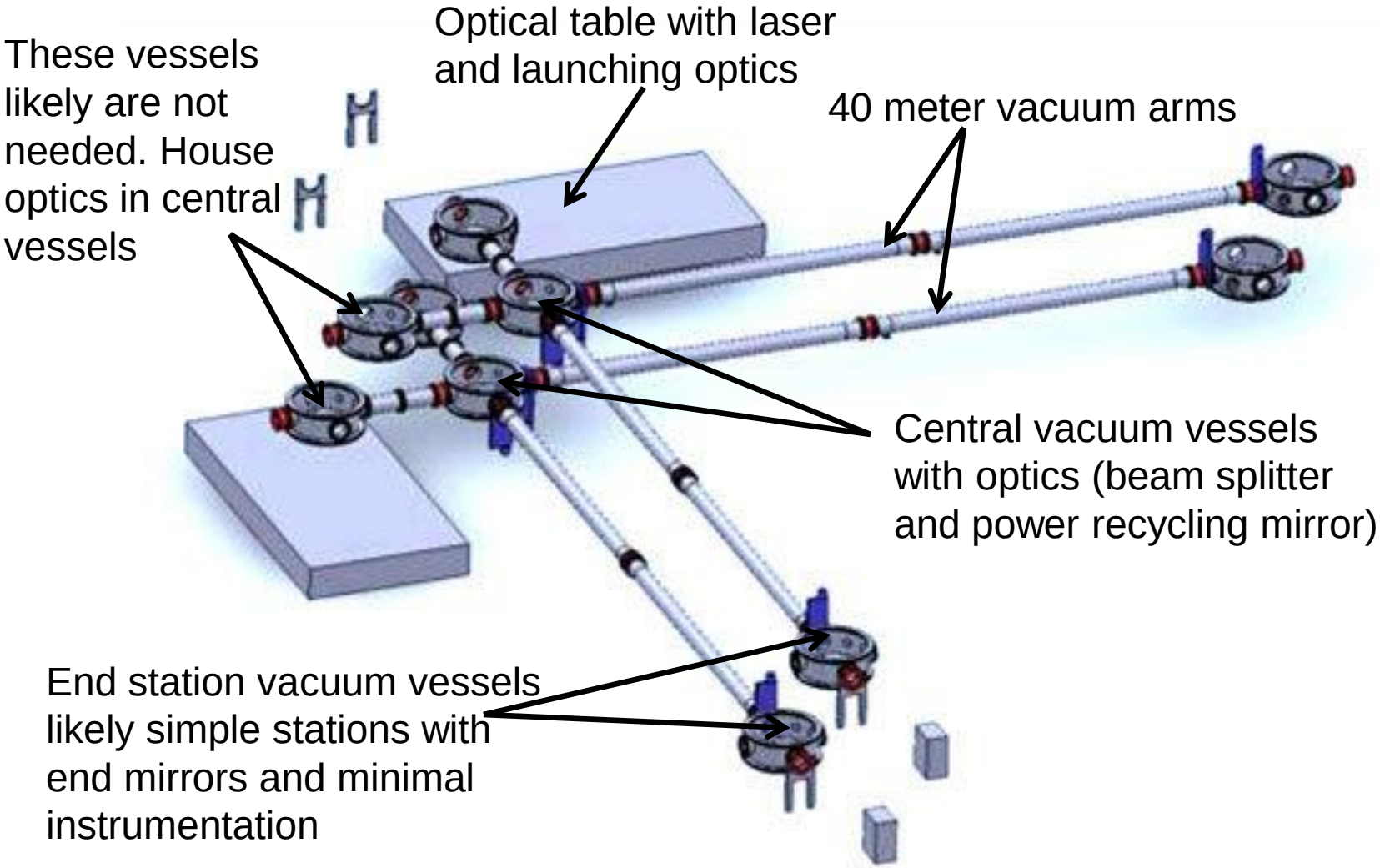

Brief History

- Jan 2009: realization that requirements for measuring the holographic noise overlapped with GammeV thoughts towards a next generation axion experiment. Both require long optical cavities with high performance.
- May 2009: Craig travels to Germany for theory work and interactions with GEO600 Gravity Wave team. Workshop with remote participation:
  - http://www.aei.mpg.de/~grote/Holoworkshop.html
  - Initial discussion with the Directorate followed
- June 2009: PPD/FCPA Mini-Review and discussions at Aspen PAC
  - http://indico.fnal.gov/conferenceDisplay.py?confId=3435
- Nov 2009: PPD Review and PAC Presentation/Proposal (P990)
  - http://indico.fnal.gov/conferenceDisplay.py?confId=2768
  - http://www.fnal.gov/directorate/program_planning/Nov2009PACPublic/PAC-Nov09-AgendaPublic.htm
- Directorate encouraging (told it would be a very good LDRD type of project), no immediate funding for the full experiment – R&D encouraged.
- Spring 2010: "1 arm 40m optical cavity at MP8" as generic detector R&D.
  - T1007 MOU signed and various safety reviews for Laser operations in MP8 beam tunnel
  - AD: MP8 infrastructure improvements and vacuum cleaning/installation
  - PPD: Mechanical installation, laser box, portable clean rooms, baffles
  - Procurement and installation continues … nearly finished
- Fall 2010: baseline change to build full (simplified) apparatus at MP8
  - Director's Review to be scheduled for ~March 2011. Anticipate we will submit a field work proposal to DOE for remaining funding resources required to build apparatus and to make the measurement.

New baseline concept

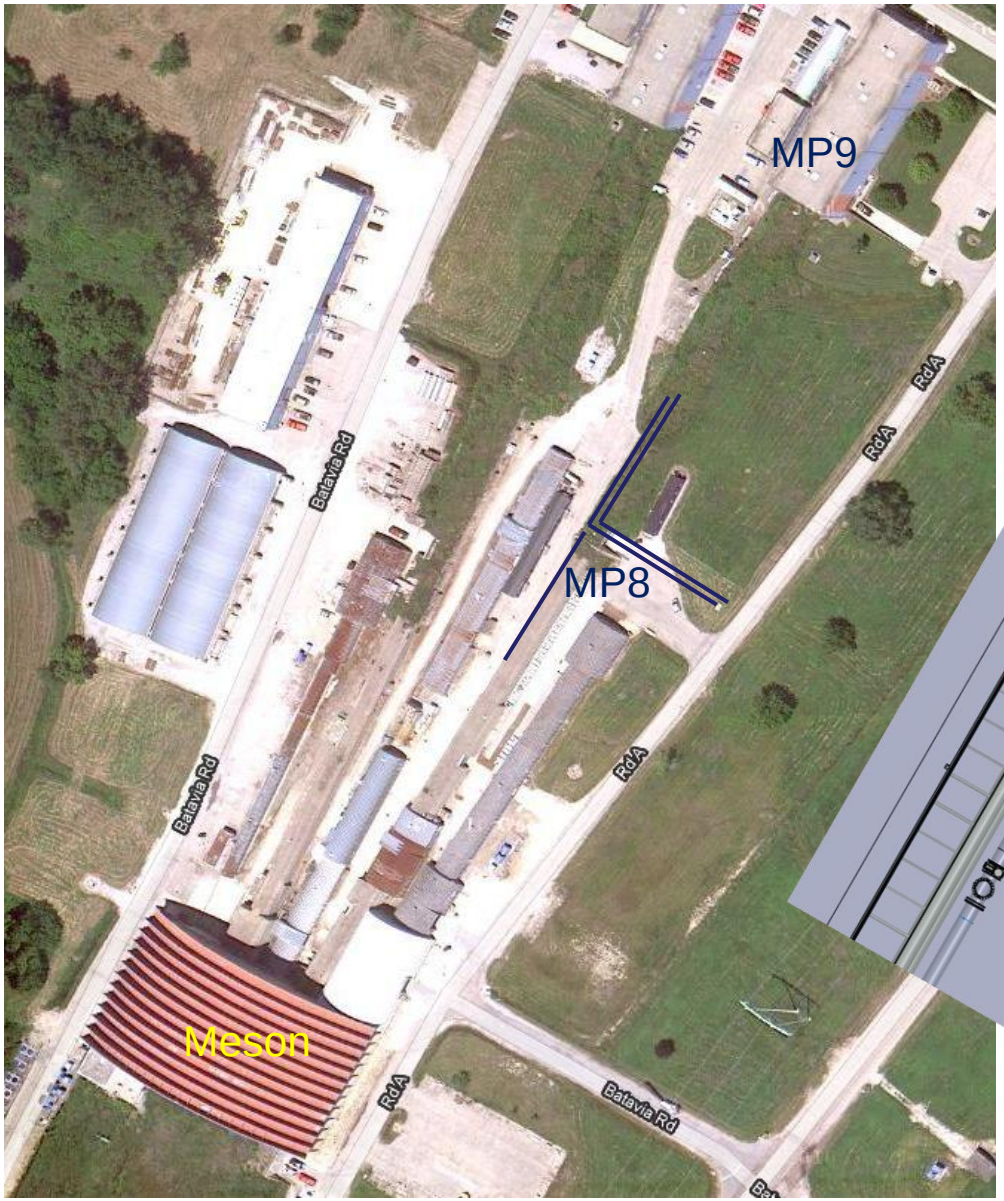

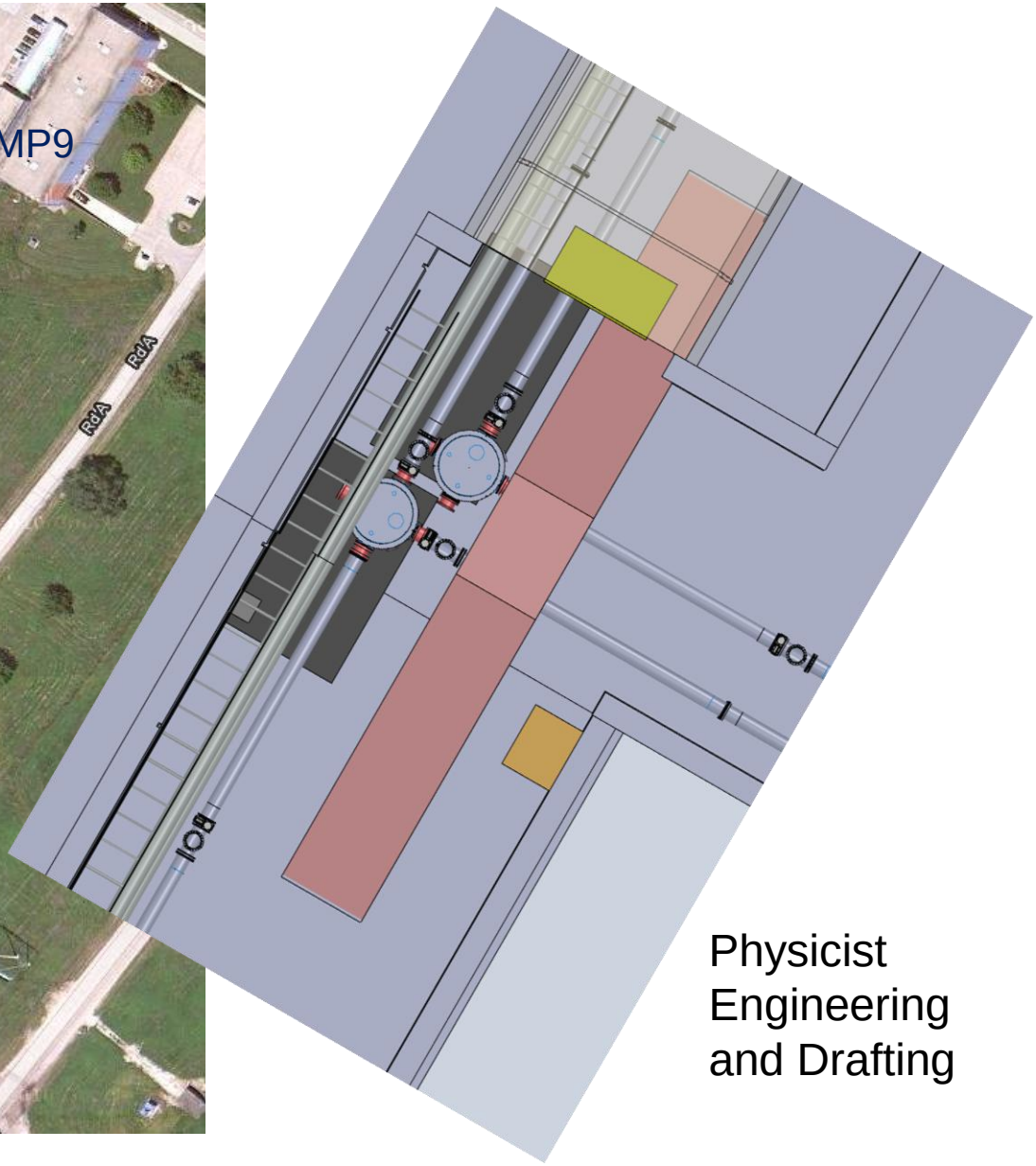

Physicist
Engineering
and Drafting

Personnel

- Scientific Effort approximately ~6 FTE plus students (my accounting):
  - PPD: 2 FTEs over 5 scientists (axion and holometer efforts)
  - AD/Computing/Tech Division: 1.5 FTEs over 3 scientists
  - University collaborators: 2 FTE over 4 scientists
  - Univ of Chicago: Two graduate students, two undergraduate students
- Accelerator Division Support
  - Preparation and infrastructure work at MP8 beamline
    - General clean-up, painting of floors, small amount of electrical work
    - Installation of doors that provide laser safety interlock
  - Vacuum preparation and installation
    - Big effort in cleaning all the vacuum parts
      - Ordered clean but vendor missed cleanliness specifications
      - Scott McCormick would normally clean parts in any case
    - Bake out under vacuum and sealed with valve
    - Installed at MP8 with dry N2 purging gas or installed under clean room
- Particle Physics Division Support
  - Alignment team to help with installation activities
  - Design and specification of baffle fabrication. Oversaw required rework
  - Installation of support arms for the vacuum tubes (many Hilte's) installed
  - Design and fabrication of a laser cover for our optics
  - Design and fabrication of two portable clean rooms. The rooms provides a means of lifting and storing the top steel service vessel plate. PPD resources installed the support rails for the clean rooms.

Current Status

- In process of installation in MP8. Shown is the south end service vessel with vacuum pointing towards the north.
- Three of 12 ten foot vacuum tubes installed.

PPD Mechanical work

- Installation of support stands
  - Simple unistrut stands attached to walls and floors
  - Carl Lindenmeyer has a beam tube support design appropriate for a warehouse siting. Likely won't use.

PPD technical help to Hilte stands and anchors into the floor.

Required patience, accuracy, judgment (avoid conduit/rebarb), and cleanliness.

Optical table cover

- Required protection and dust minimization over laser table optics leads to a cover.
- PPD resources to design, fabricate, install a cover.
  - Could have purchased but would not get customized features
  - PPD designer incorporated useful enhancements

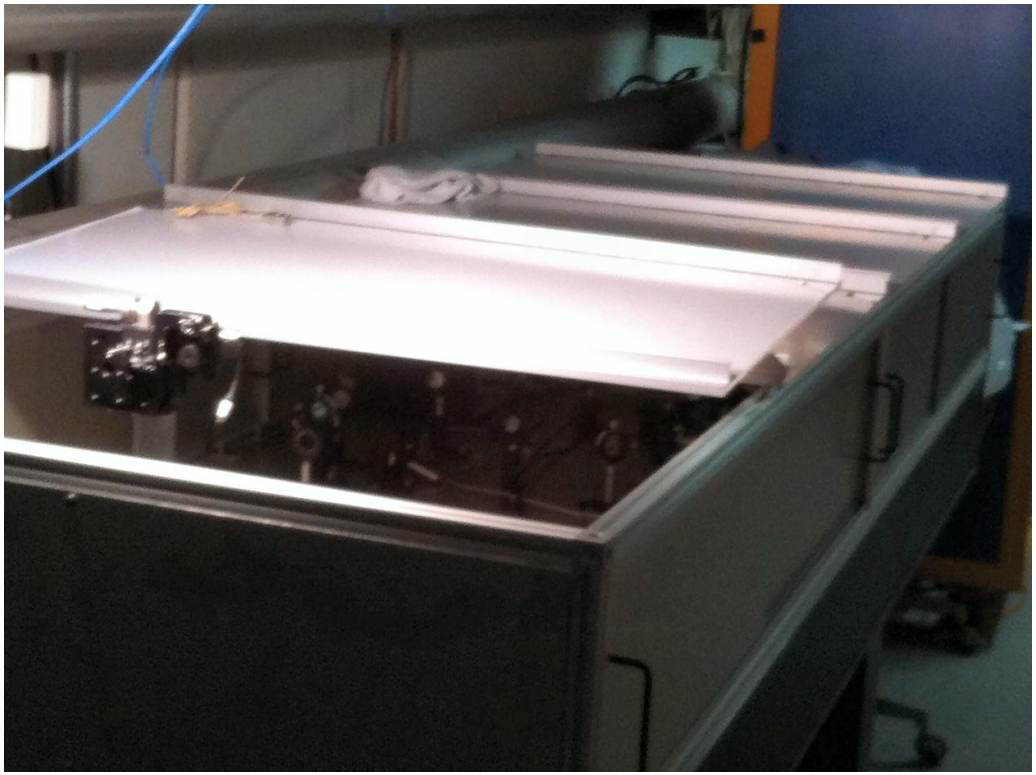

Baffles

- Scattered light in tubes can add phase noise to interferometer signal. Scattered light can be removed using baffles.
- Design similar to LIGO baffles. Simple laser cut pieces out of thin sheet steel. Utilize spring nature of the metal to keep them in place in beam tubes.
- PPD technical resources made prototype, oversaw procurement of materials and fabrication at laser cutting place. Manufactured insertion tool. Worked to re-work parts when it was found they could flop over. Made welding fixture and oversaw welding operations.

Portable clean rooms

- Required prevention of dust contamination inside vacuum regions lead to need for clean rooms.
- Two rooms required to open both ends simultaneously.
- Novel unistrut ceiling track to allow for clean room over vacuum tubes in the event they need to be opened up.
- PPD did design, procurement of parts, assembly, and installation. No commercial alternative given the many constraints at MP8. Many aspects are value added.
  - Incorporation of lighting fixtures
  - Novel design to allow for 3 foot aisle-way requirement
  - Novel support/lifting fixture for service vessel top plate (150 pounds)
- Look for simplification for holometer clean rooms (make entire central area clean rather than portable nature).

Portable clean rooms (cont)

Lifting fixture incorporated into clean room

Note many constraints – cable trays, water pipes, exit signs, conduit, wall phones, emergency lights, etc.

PPD Mechanical Resources Request

- FY 2011 PPD technical effort dominated by clean rooms which took much more effort than anticipated.
- We have “spent” the total year’s SWF allocation.
- Our goals
  - Jan – March 2011: Work towards Director’s Review Preparations
  - March – Dec 2011: If positive, we think we can build the holometer
  - Constraints with our LIGO collaborators who will become busier and busier on Advanced LIGO. Plus, we worry about competition.
- We wish to explore whether and under what conditions some additional PPD technical resources might be provided to us.
  - We anticipate not being able to have open-ended requests.

Jan 2011- March 2011

- Finish clean room installation/commissioning
  - Should be done by year's end. Request is to not be so rigid on this. Request 1 day Carl / 2 techs per month.
  - Alignment group might be required to help situate the vacuum system on a beam line axis
- Mechanical Resources (optional – expect to be lower priority than other activities)
  - 2 techs for 2 days per month to assist with clean-up and north tunnel preparation.
  - Vacuum/Mechanical engineer consultation 2 days per month to help with designs for director's review. We would benefit from review of our concepts.

Longer term request

- Lower priority tasks that can wait until after the review or be worked on at lower priority to help with our overall schedule and improve the design concepts.
  - Design and fabrication of new optics table/laser enclosures based upon existing items (2 weeks estimated)
  - Design and fabrication of new clean rooms. Central clean room, inside end station, external end station (4 weeks estimated)
  - We expect a few mechanical “widgets” to help overcome unforseen issues. For example, we might need a glove box to work on end station optics in addition to or instead of a clean room (4 weeks estimated)
  - Design of weather protection for outside holometer arms (2 weeks estimated) and eventual installation (4 weeks estimated).

Electrical Engineering Request

- So far, PPD EED has assisted with making ready a relay rack with incorporated smoke detection safety system.
- We request design and printed circuit board resources for two systems to be tested on the 1D cavity and needed for the final system. (1) piezo control circuit and (2) a buffer/filter interface between the front end sensors and the Labview/National Instruments DAQ system.
- Estimated request is 6 weeks engineering and drafting and 4 weeks assembly.

Piezo driver boards and chassis

Request customization of existing designs used by LIGO. Single channel Schematic and board is shown. We require ~30 channels (ten 3-channel boards)

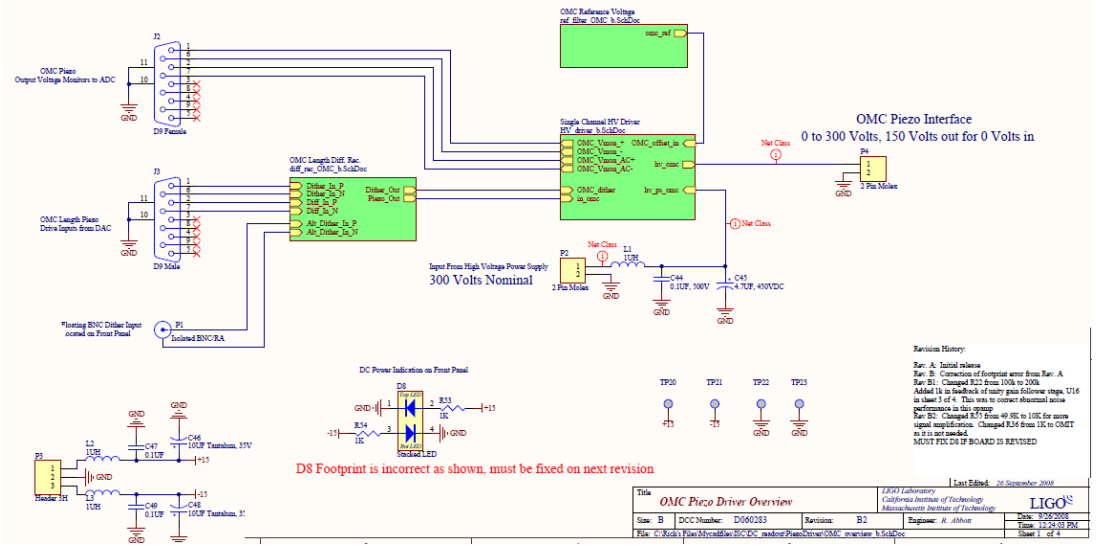

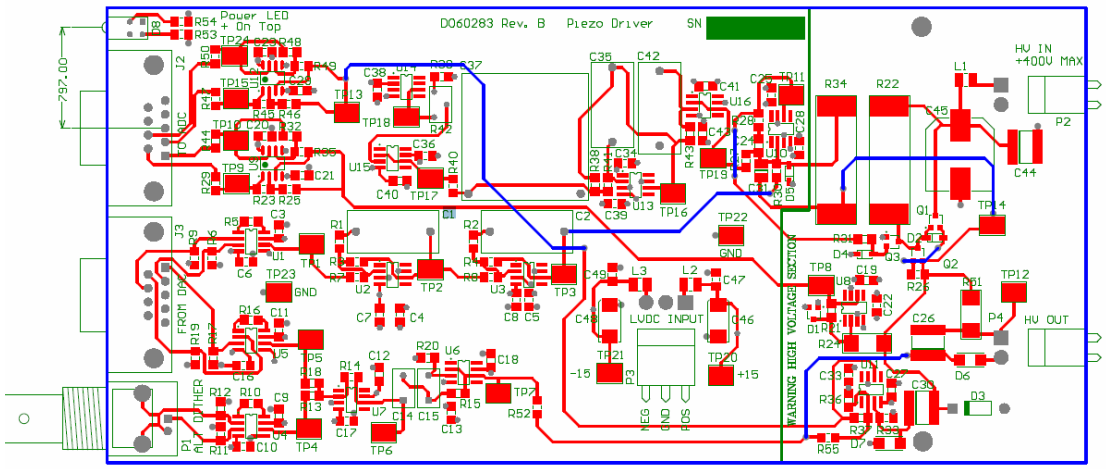

0-200 V range, 100 V bias, ±10 V input
20:200 pole:zero input filtering for DC signal
500 Hz passive output filter
small signal (0.5 Vpkpk) buffered, high frequency, capacitively coupled input
Short circuit protection
Powered by external linear PS
Few milliamp source current
100 nV output noise above 1 kHz
~10 nV output noise above 100 kHz
2 uF PZT capacitance

Filter Buffer Circuits

- Already prototyped.
- 8 ch analog filter to roll of both I/O of the National Instruments PXI-7852R at 40KHz
- Desire programmable gain of 1, 10, and 100
- Differential twised pairs
- Power from the 7852
- Need better CMRR

above 5 KHz (small change)

- DC-DC converter and

filter for +/- 12V derived

from the 5V.

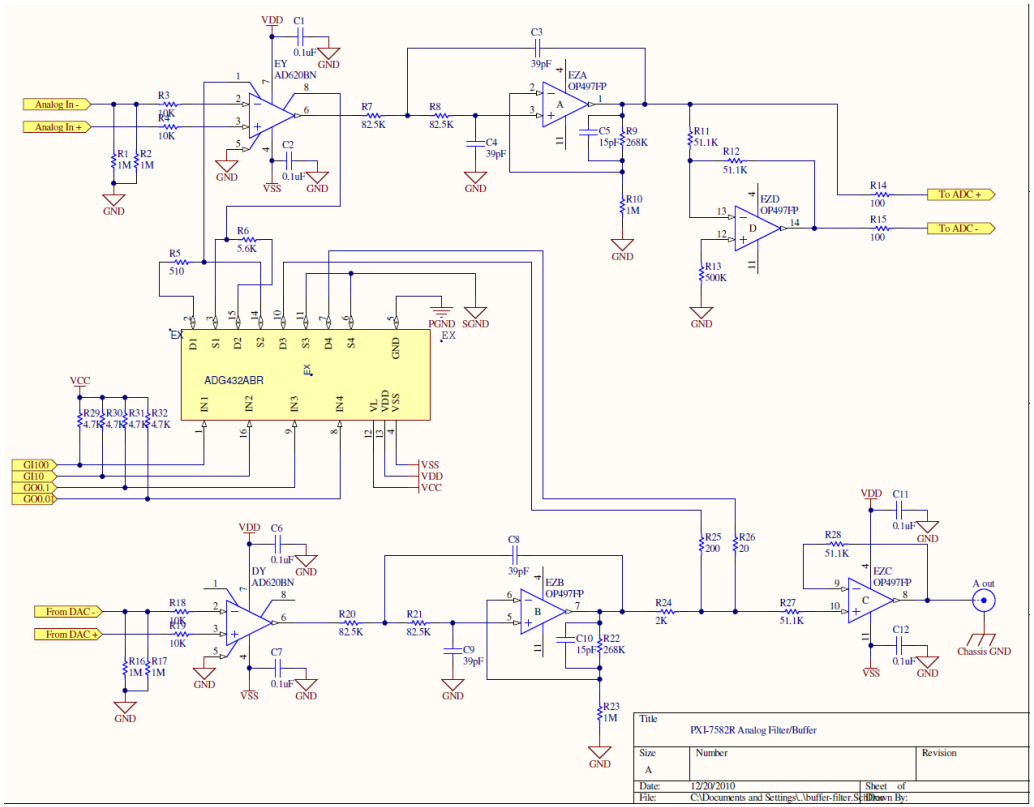

Summary

- Request for small continuing mechanical PPD support
  - Some small help and consultation. Not open-ended.
  - 9 engineering days requested by Jan and March
  - 12 technician days requested by Jan and March
- Specific PPD EED request
  - Two circuit board projects. Request design work start in January.
  - Refined estimate after consult with PPD EED
- Would like additional mechanical support to get started with design to improve concepts for the holometer, but this is at your discretion.
  - Holometer clean rooms, laser table covers, etc.
- If the outcome of the Director's Review is successful, there is additional work such as outside weather protection that PPD technical help would be most welcomed.