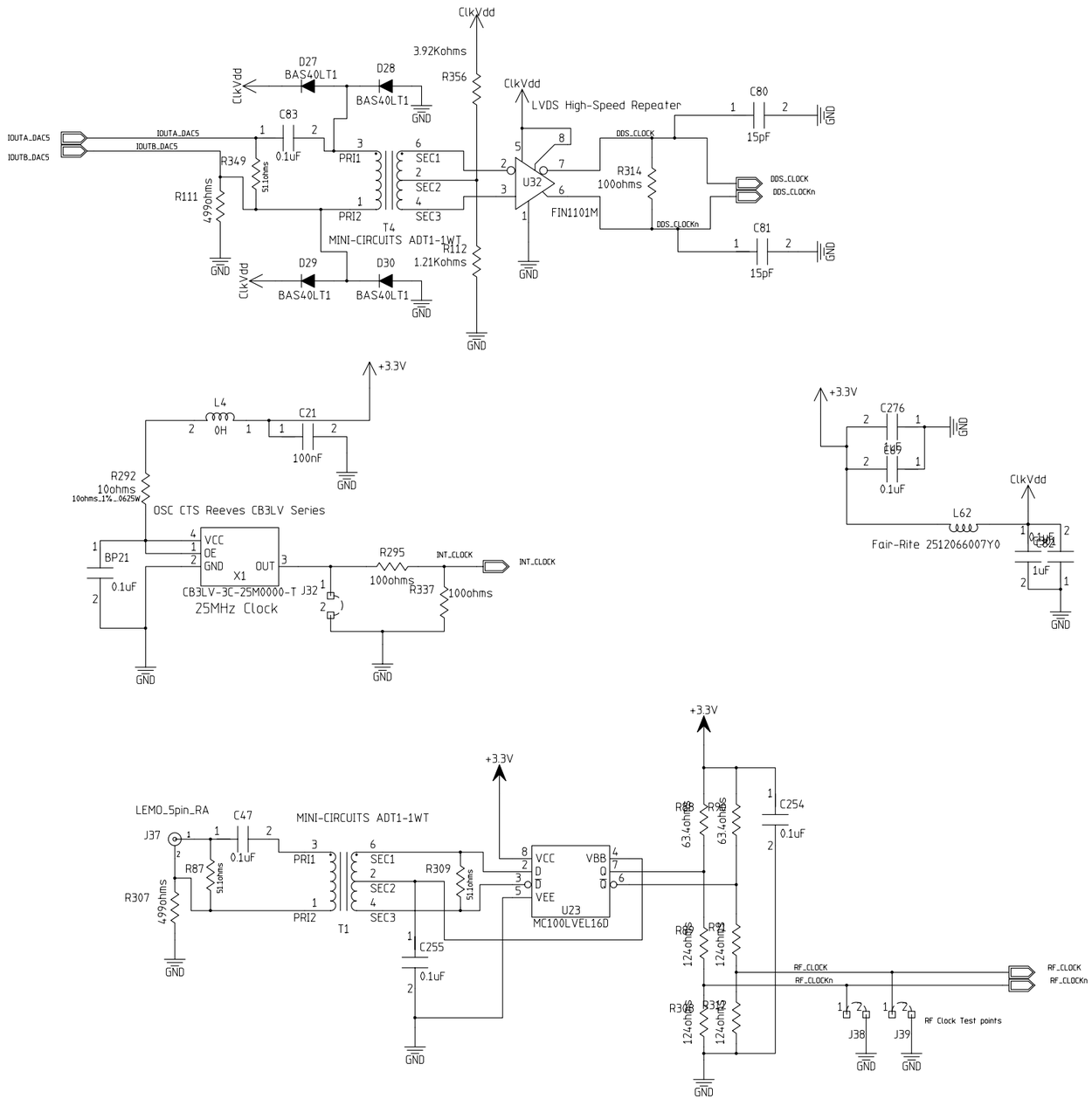

MODFIED 05/02/2005 10:33:36 AM		Page 6 of 16	
EED Department	ORIGINATOR	Marcus Larwill	DATE 9/3/04
	DRAWN	Marcus Larwill	DATE 9/3/04
	CHECKED	checked	DATE date
	APPROVED	approved	DATE date

Fermi National Accelerator Laboratory
United States Department of Energy

F:\Project\Beams_Div\Damper\damper2\Damper_test\Damper_test.prj

SIZE	DRAWING NUMBER	REV
D	0000-EB-173559	A

Schematic Page 01 of 01

H=BND; V=4LA