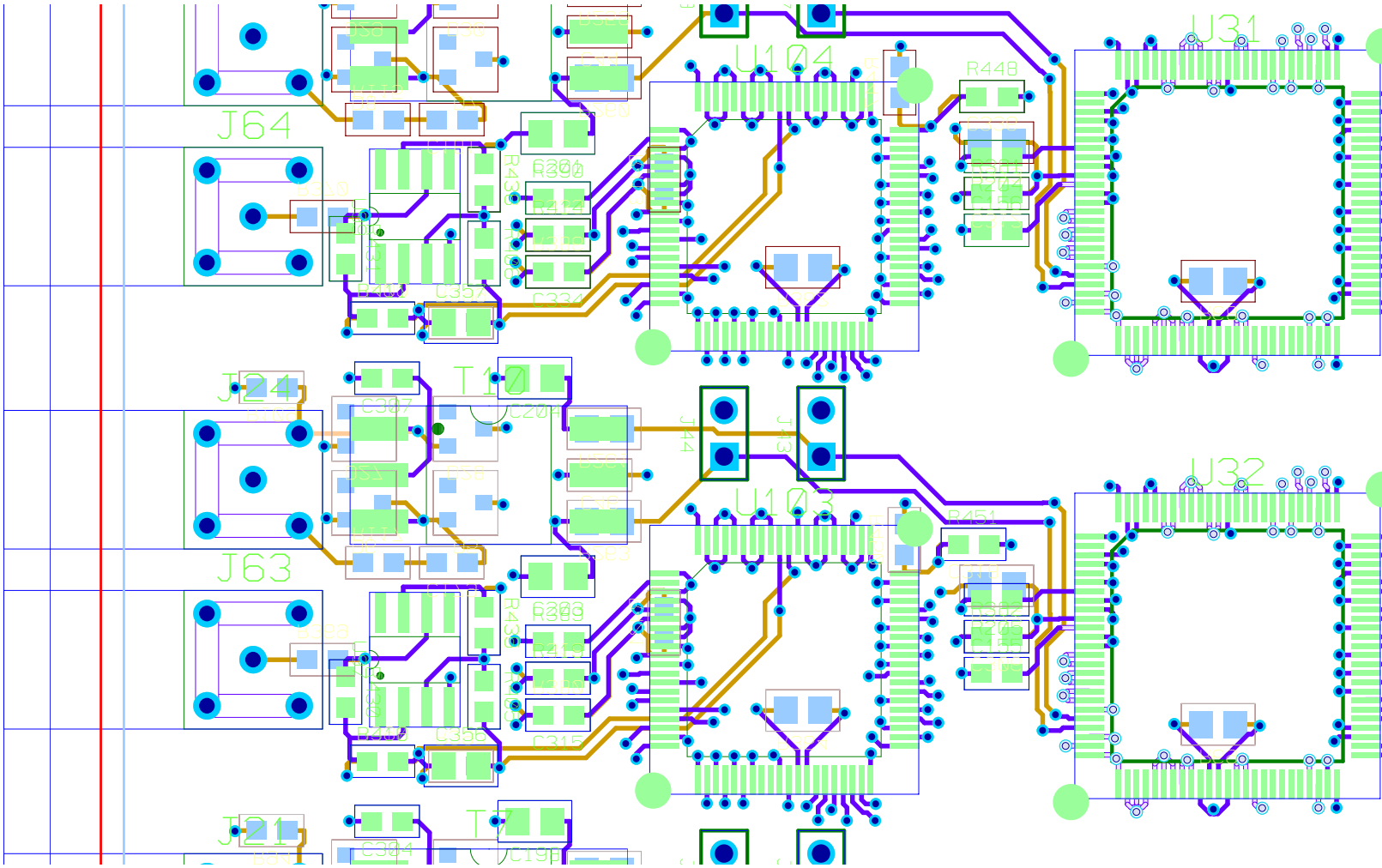
J64
J63
U104
U103
U31
U32
R448
R451
C357
C334
C356
C315
C307
C204
C304