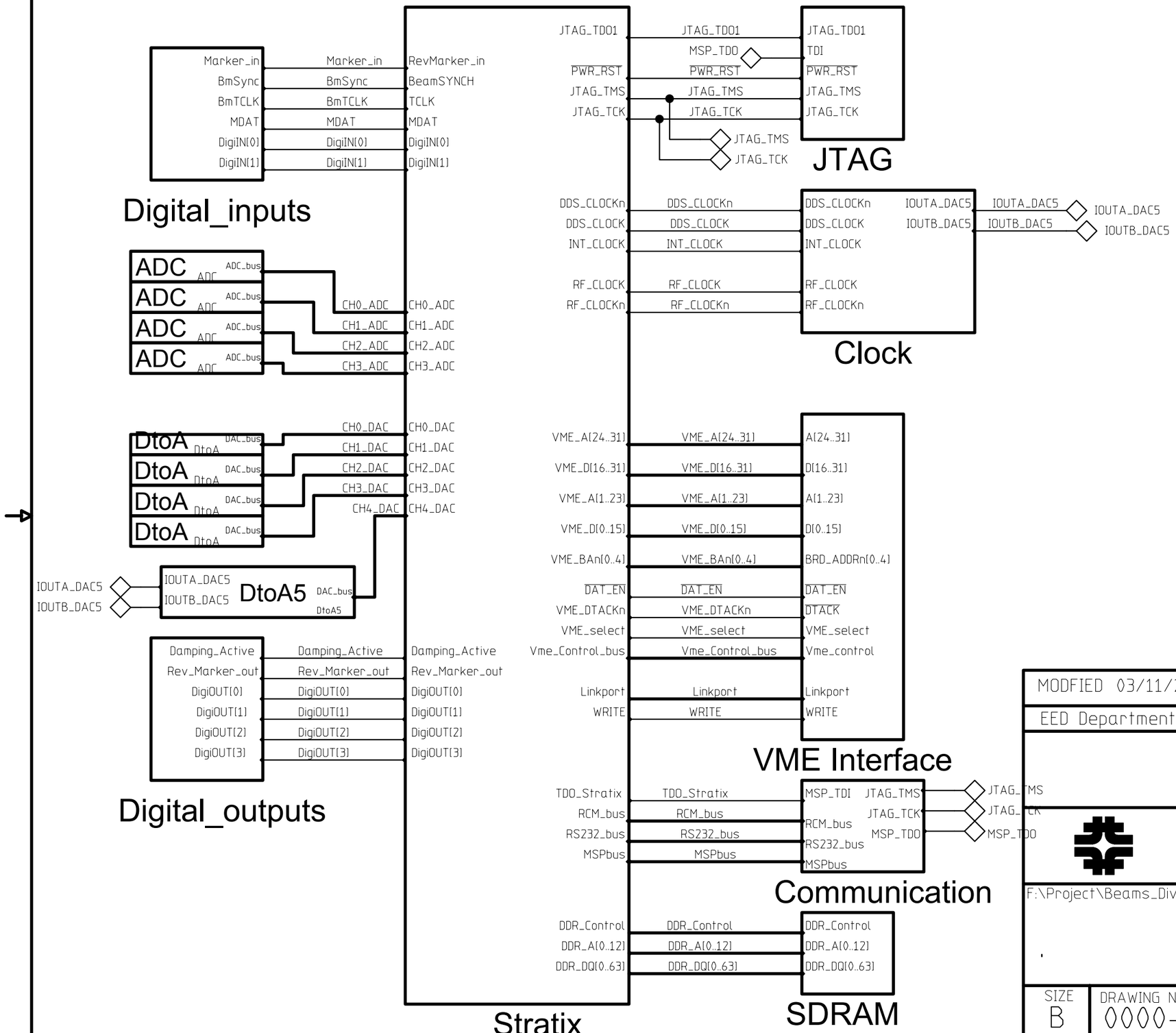

MODIFIED 03/11/2005 03:40:28 PM		Page 1 of 16	
EED Department	ORIGINATOR	Marcus Larwill	DATE 9/3/04
	DRAWN	Marcus Larwill	DATE 9/3/04
	CHECKED	checked	DATE date
	APPROVED	approved	DATE date

Fermi National Accelerator Laboratory
United States Department of Energy

F:\Project\Beams_Div\Damper\damper2\Damper_test\Damper_test.prj

New VME Damper
TOP LEVEL HIERARCHY

SIZE	DRAWING NUMBER	REV
B	0000-EB-173559 Schematic Page 01 of 01	A

H=2LA; V=2LA