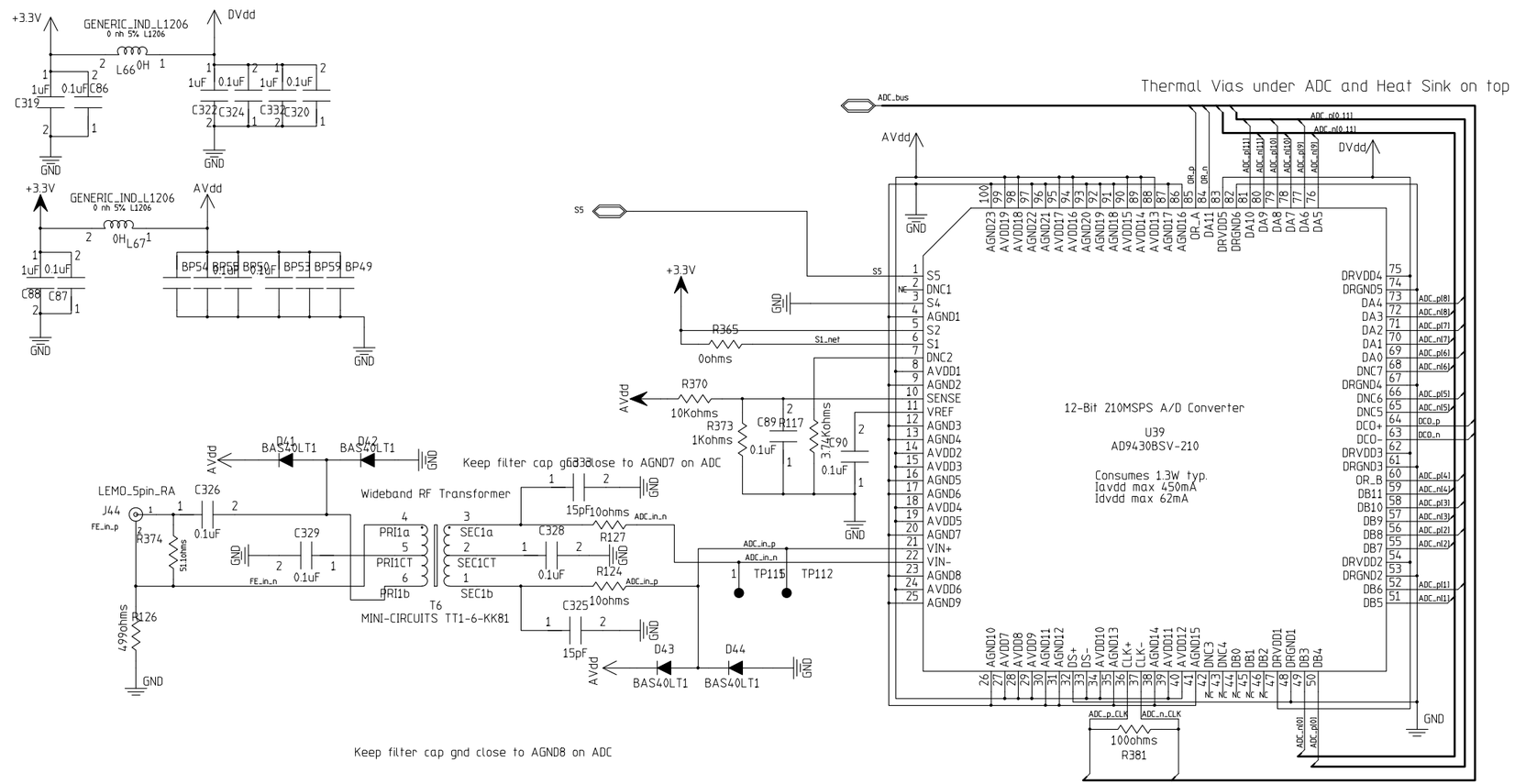

MODFIED 9/27/2005 4:07:59 PM		Page Number Page Total	
EED Department	ORIGINATOR	Marcus Larwill	DATE 9/3/04
	DRAWN	Marcus Larwill	DATE 9/3/04
	CHECKED	checked	DATE date
	APPROVED	approved	DATE date

Fermi National Accelerator Laboratory
United States Department of Energy

F:\Project\Beams_Div\Damper\damper2\Damper_test\Damper_test.prj

A to D

SIZE	DRAWING NUMBER	Schematic Page 01 of 01	REV
D	0000-EB-173559		A

H=8ND, V=4LA