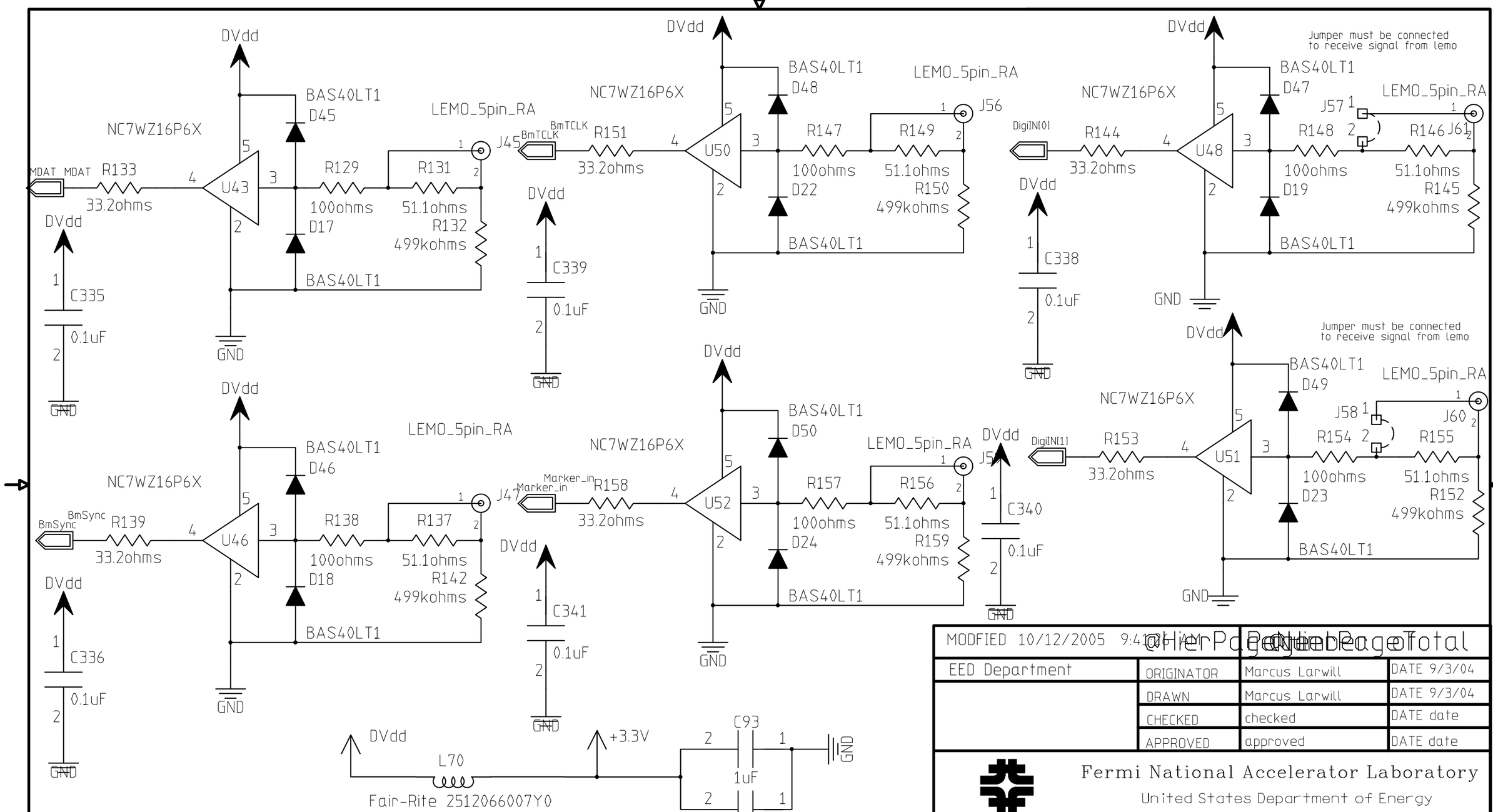
DVdd
NC7WZ16P6X
MDAT MDAT
R133
33.2ohms
U43
BAS40LT1
D45
R129
100ohms
D17
R131
51.1ohms
R132
499kohms
LEMO_5pin_RA
J45
BmTCLK
R151
33.2ohms
U50
BAS40LT1
D48
D22
R147
100ohms
R149
51.1ohms
R150
499kohms
J56
DigiIN(0)
R144
33.2ohms
U48
D47
D19
R148
100ohms
R146
51.1ohms
R145
499kohms
J57
J61
Jumper must be connected
to receive signal from lemo
C335
C339
C338
0.1uF
GND
BmSync
R139
33.2ohms
U46
D46
D18
R138
100ohms
R137
51.1ohms
R142
499kohms
J47
Marker_in
R158
33.2ohms
U52
D50
D24
R157
100ohms
R156
51.1ohms
R159
499kohms
J5
DigiIN(1)
R153
33.2ohms
U51
D49
D23
R154
100ohms
R155
51.1ohms
R152
499kohms
J58
J60
C336
C341
C340
L70
Fair-Rite 2512066007Y0
+3.3V
C93
1uF
C342
Six Terminated 50-Ohm TTL Inputs:
Compatibility with Controls systems signals
Protected against +/-10V transients
VCC =3.3V
MODIFIED 10/12/2005 9:41:06 AM
EED Department
ORIGINATOR Marcus Larwill DATE 9/3/04
DRAWN Marcus Larwill DATE 9/3/04
CHECKED checked DATE date
APPROVED approved DATE date
Fermi National Accelerator Laboratory
United States Department of Energy
F:\Project\Beams_Div\Damper\damper2\Damper_test\Damper_test.prj
Digital Input
SIZE B
DRAWING NUMBER 0000-EB-173559
Schematic Page 01 of 01
REV A
H=2LA; V=2LA