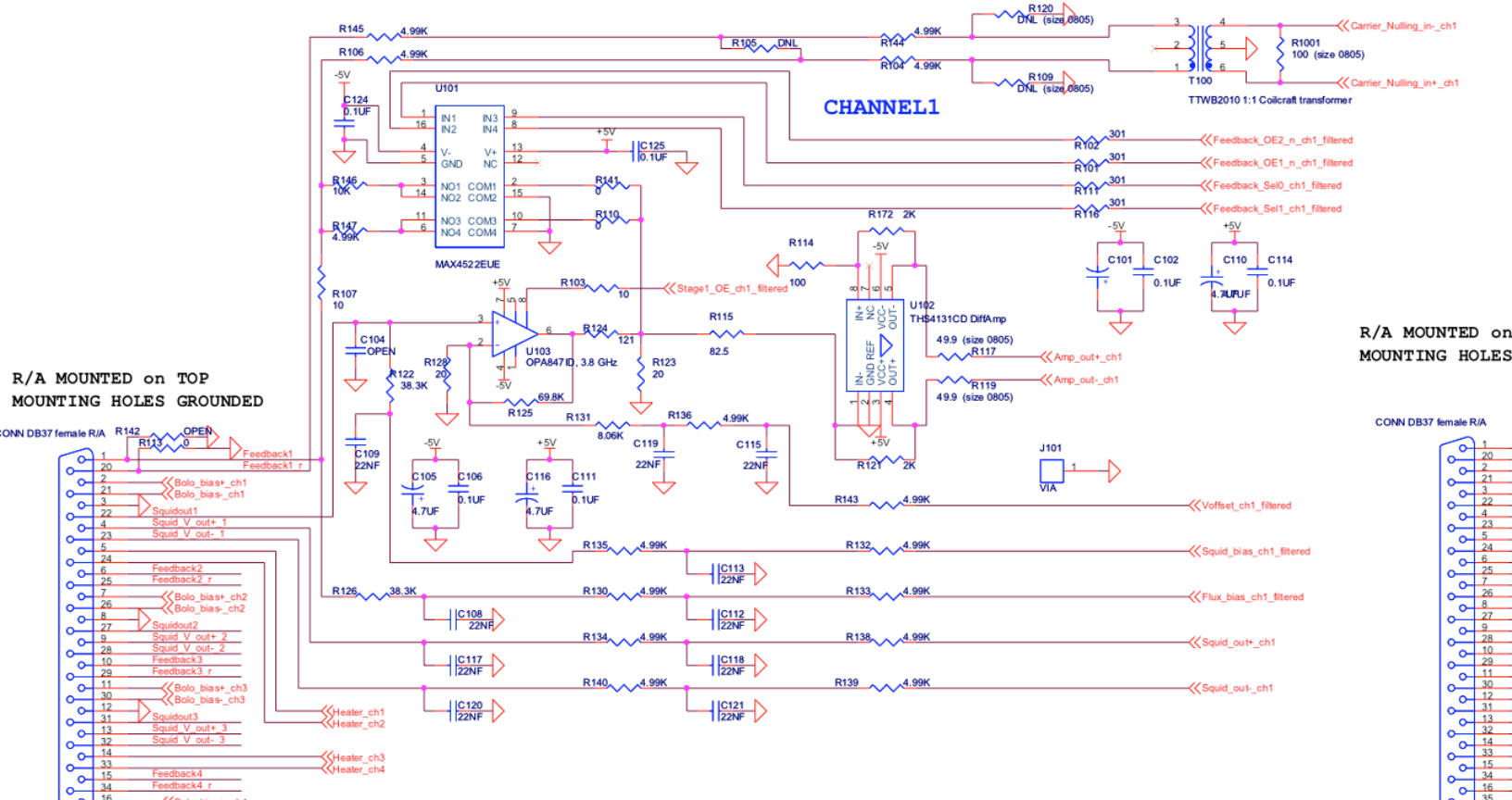
CHANNEL1
R/A MOUNTED on TOP
MOUNTING HOLES GROUNDED
R/A MOUNTED on
MOUNTING HOLES
CONN DB37 female R/A
CONN DB37 female R/A
U101
MAX4522EUE
U103
OPA847ID, 3.8 GHz
U102
THS4131CD DiffAmp
T100
TTWB2010 1:1 Coilcraft transformer
R1001
100 (size 0805)
R120
DNL (size 0805)
R109
DNL (size 0805)
R105 DNL
R145 4.99K
R106 4.99K
R144 4.99K
R104 4.99K
R146 10K
R147 4.99K
R107 10
R141 0
R110 0
R103 10
R124 121
R115 82.5
R114 100
R172 2K
R121 2K
R117 49.9 (size 0805)
R119 49.9 (size 0805)
R102 301
R101 301
R111 301
R116 301
R122 38.3K
R128 20
R123 20
R125 69.8K
R131 8.06K
R136 4.99K
R113 0
R142 OPEN
R143 4.99K
R135 4.99K
R132 4.99K
R126 38.3K
R130 4.99K
R133 4.99K
R134 4.99K
R138 4.99K
R140 4.99K
R139 4.99K
C124 0.1UF
C125 0.1UF
C104 OPEN
C109 22NF
C105 4.7UF
C106 0.1UF
C116 4.7UF
C111 0.1UF
C119 22NF
C115 22NF
C101 0.1UF
C102 0.1UF
C110 4.7UF
C114 0.1UF
C113 22NF
C108 22NF
C112 22NF
C117 22NF
C118 22NF
C120 22NF
C121 22NF
J101
VIA
Carrier_Nulling_in-_ch1
Carrier_Nulling_in+_ch1
Feedback_OE2_n_ch1_filtered
Feedback_OE1_n_ch1_filtered
Feedback_Sel0_ch1_filtered
Feedback_Sel1_ch1_filtered
Stage1_OE_ch1_filtered
Amp_out+_ch1
Amp_out-_ch1
Voffset_ch1_filtered
Squid_bias_ch1_filtered
Flux_bias_ch1_filtered
Squid_out+_ch1
Squid_out-_ch1
Feedback1
Feedback1_r
Bolo_bias+_ch1
Bolo_bias-_ch1
Squidout1
Squid_V_out+_1
Squid_V_out-_1
Feedback2
Feedback2_r
Bolo_bias+_ch2
Bolo_bias-_ch2
Squidout2
Squid_V_out+_2
Squid_V_out-_2
Feedback3
Feedback3_r
Bolo_bias+_ch3
Bolo_bias-_ch3
Squidout3
Squid_V_out+_3
Squid_V_out-_3
Heater_ch1
Heater_ch2
Heater_ch3
Heater_ch4
Feedback4
Feedback4_r