The SQUID Error Signal

Dennis Seitz
Kyle Sundqvist

November 16, 2007

CDMS Electronics Meeting

Consider the stability of the amplifier at lock-point on the V-Phi curve.

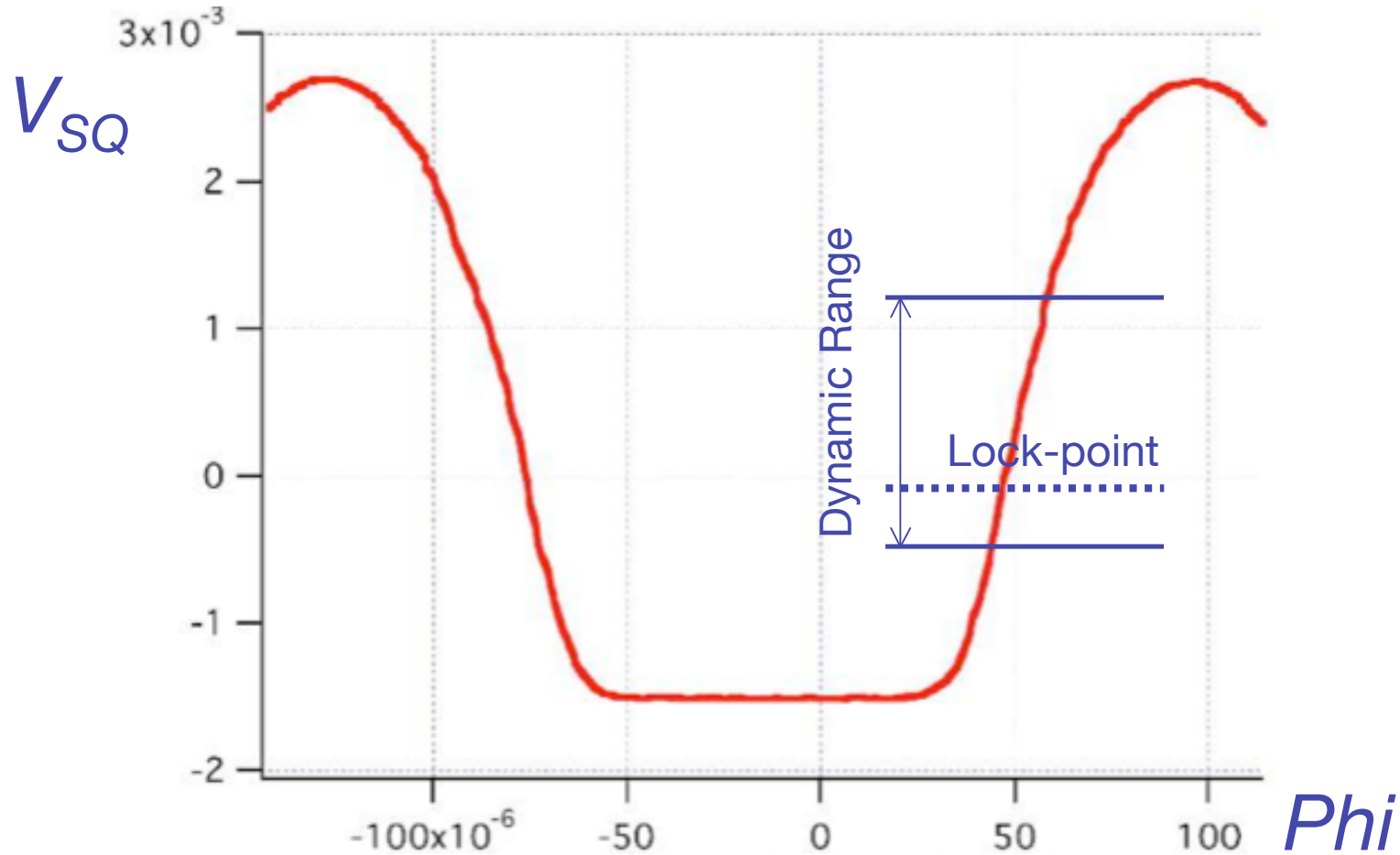

What dynamic range do we need?

The SQUID amplifier in open loop.

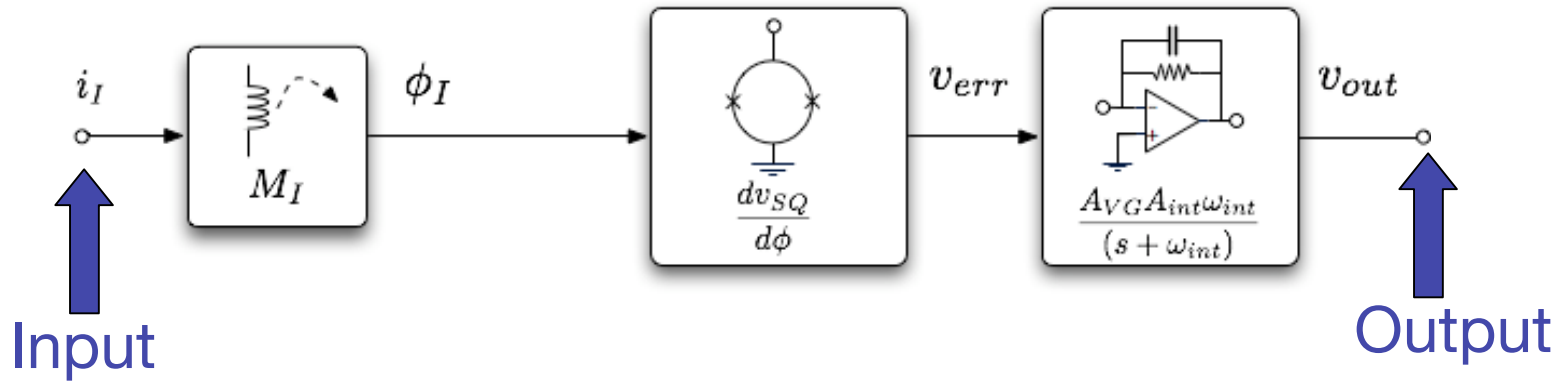

$$H_{OL}(s) = M_I\left(\frac{dv_{SQ}}{d\phi}\right)\frac{A_{VG}A_{int}\omega_{int}}{(s+\omega_{int})}$$

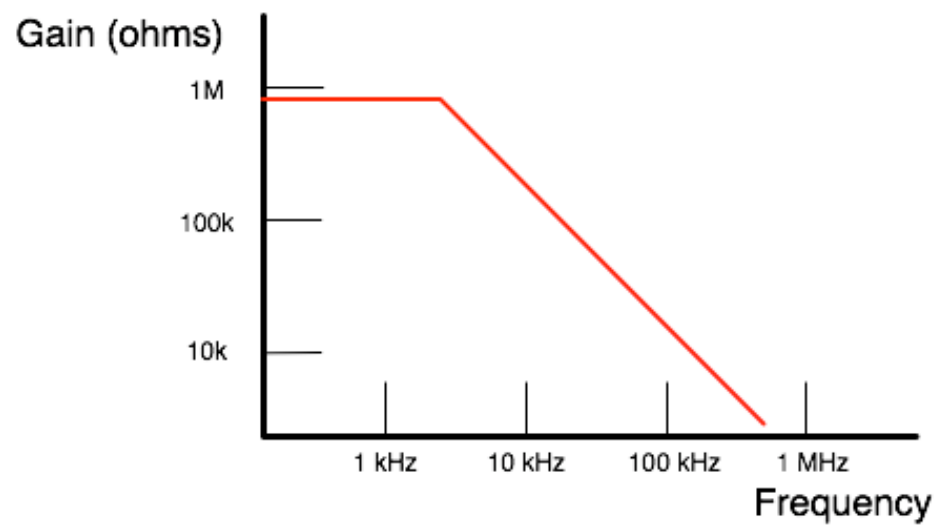

The SQUID amplifier in closed loop.

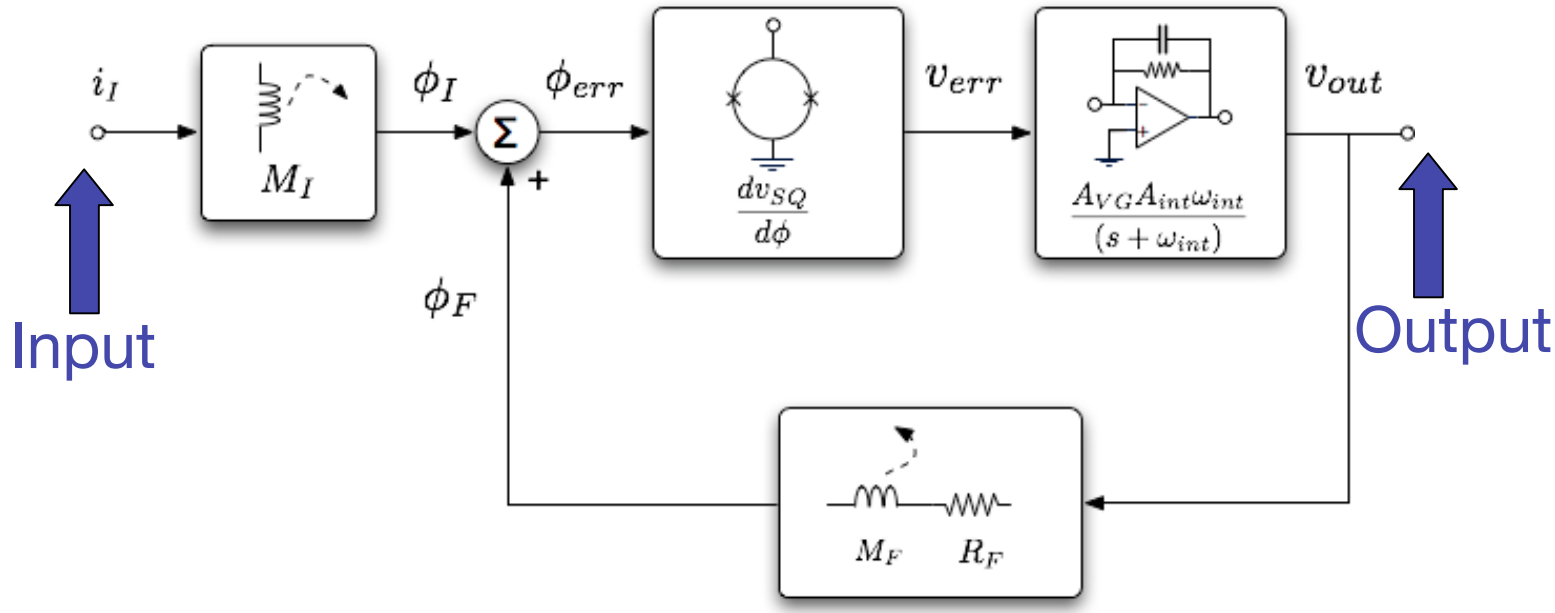

$$H_{CL}(s) = \left(\frac{M_I}{M_F}R_F\right)\frac{s_o}{(s_o+s)}$$

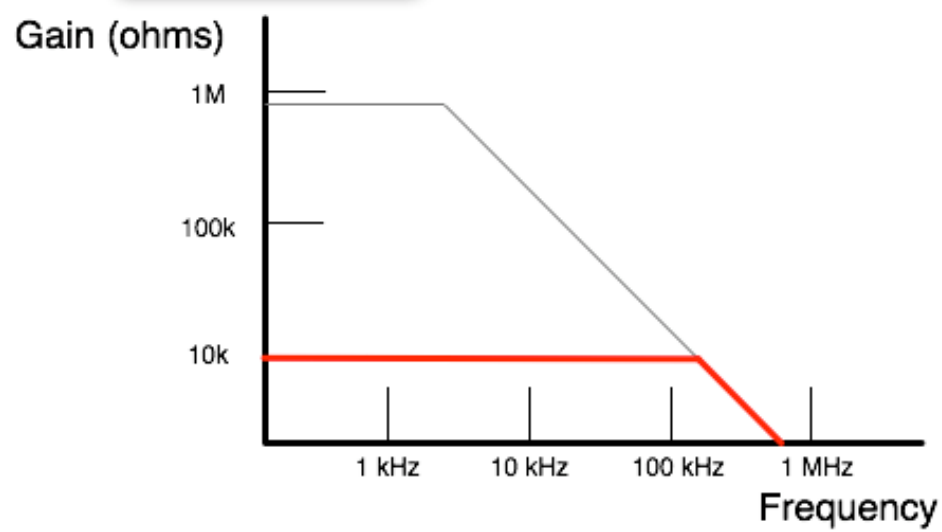

What we must consider is the ***voltage error signal.***

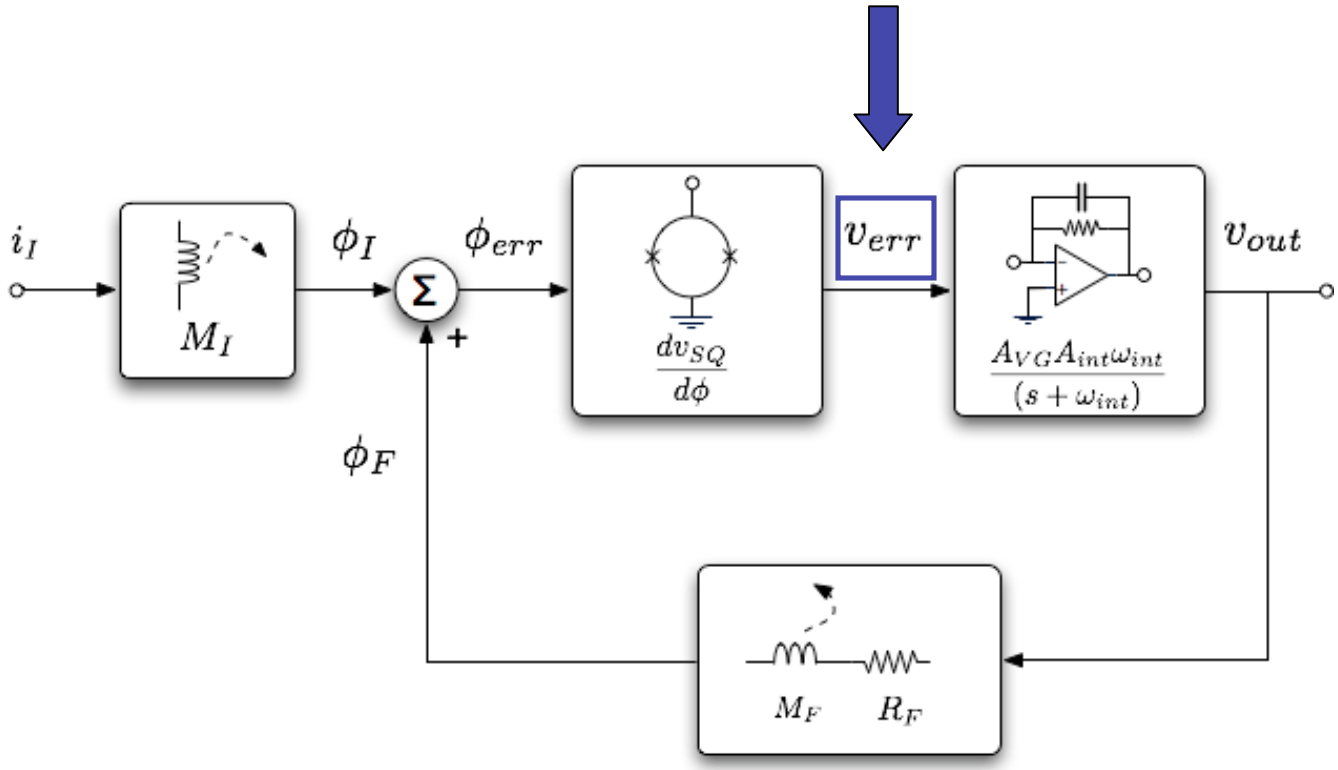

Again, here is the closed-loop response.

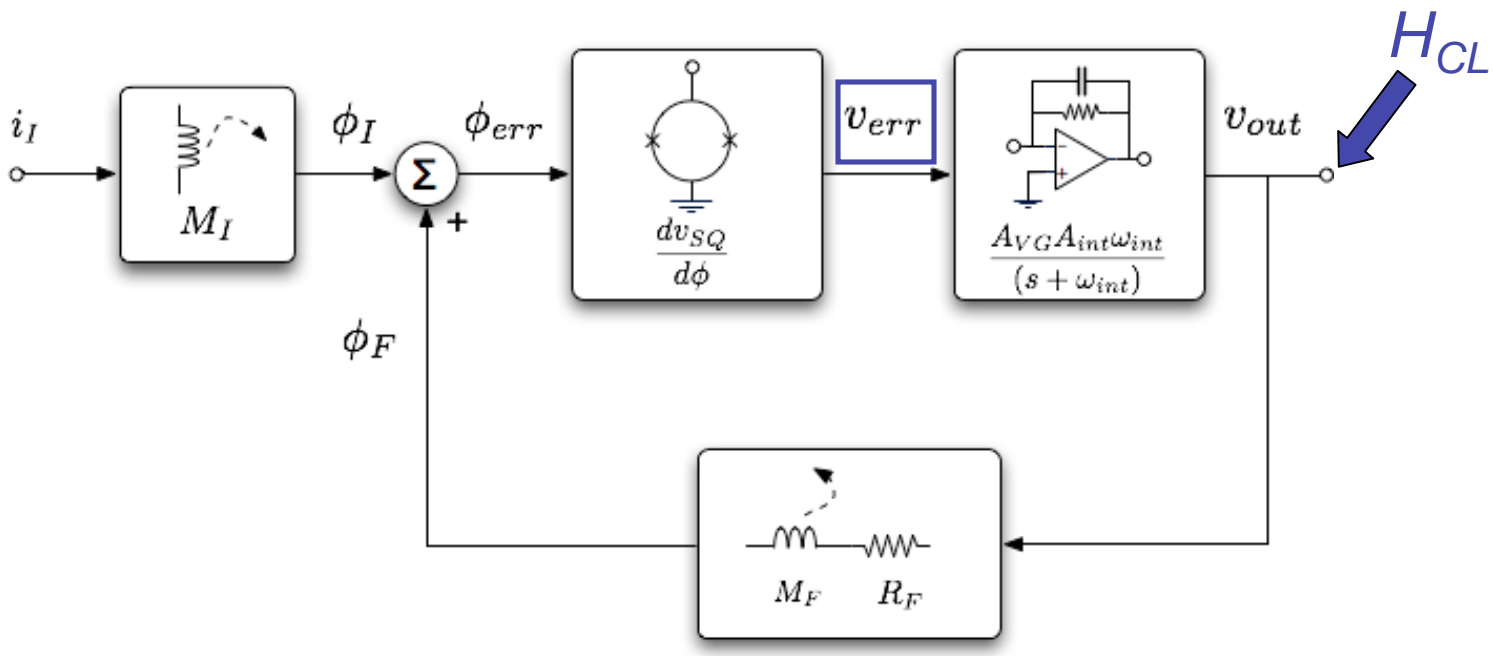

$$H_{CL}(s)$$

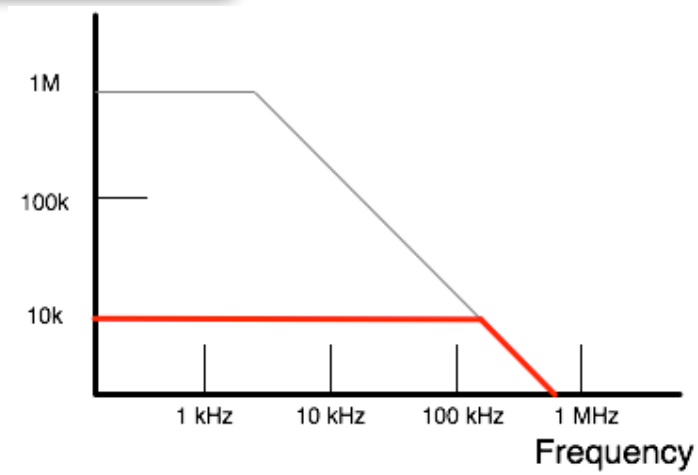

Now, divide out the gain of the warm electronics.

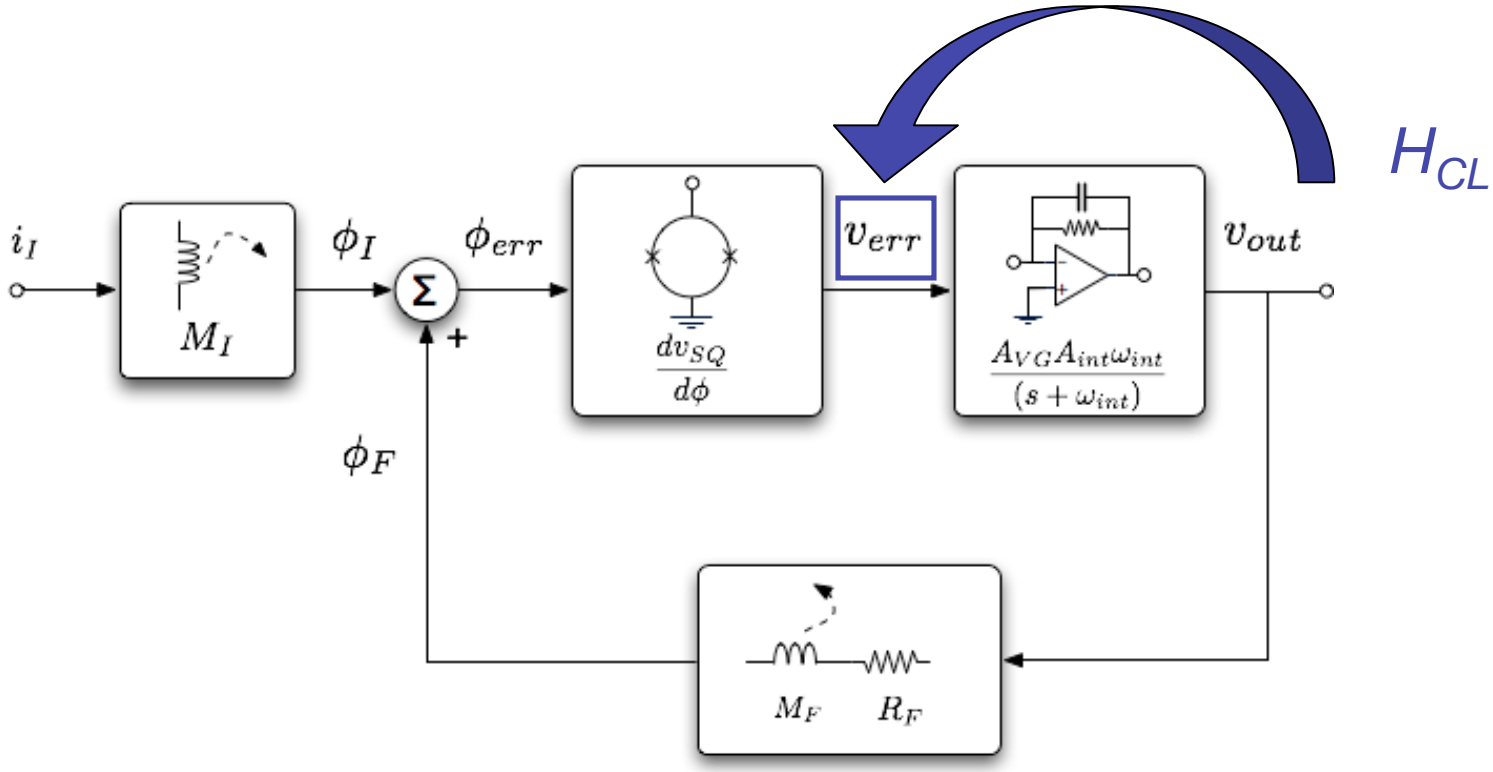

$$\frac{H_{CL}(s)}{\left(\frac{A_{VG}A_{int}\omega_{int}}{s+\omega_{int}}\right)}$$

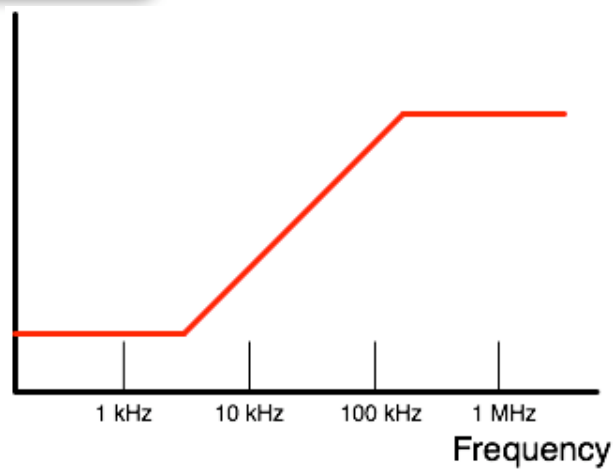

Here is the time-domain response.

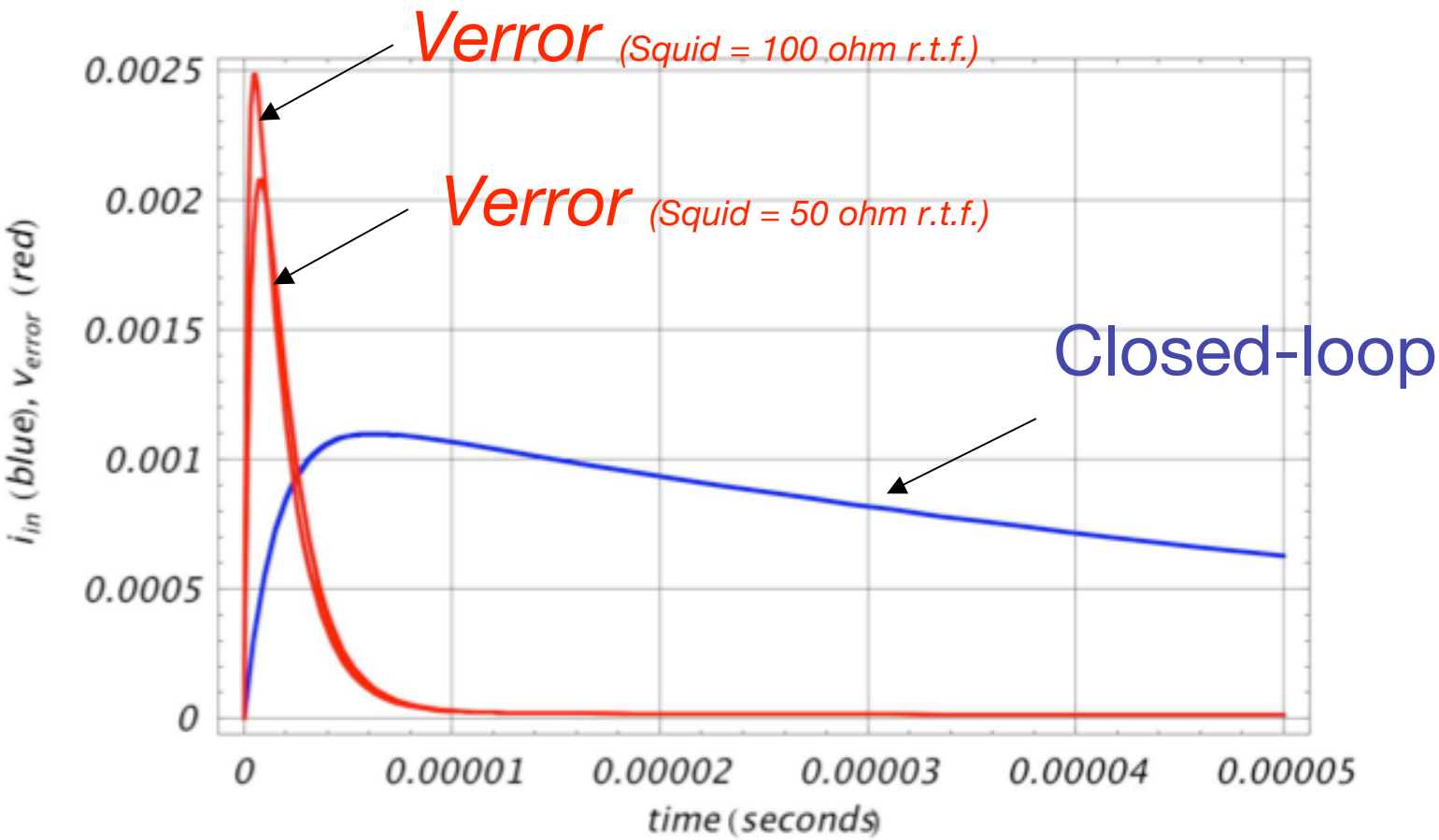

Voltage scaled by 20, to fit in range.
Assumes a 100 kHz R/(2 Pi L) frequency
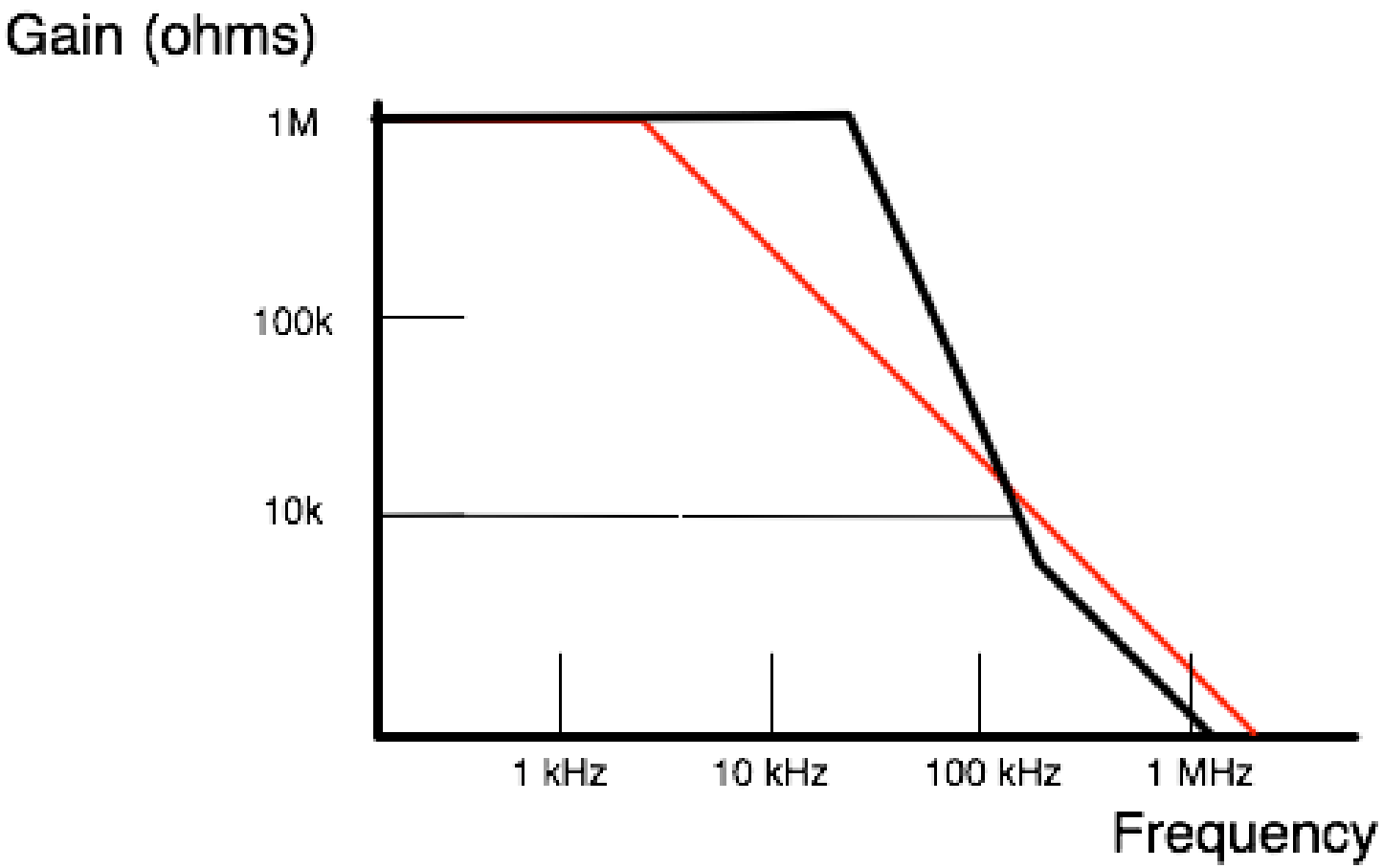
Reduce the burden at the SQUID by changing the open loop response.