REV	DESCRIPTION	DRAWN	DATE
		APPROVED	DATE
A	REVISED ALL CONNECTOR LOCATIONS AND ASSOC'D DIMENSIONS. ADDED FILLETED CORNERS ON ITEM #3.	D.FRIEND	23-OCT-2006
		C. GROZIS	24-OCT-2006

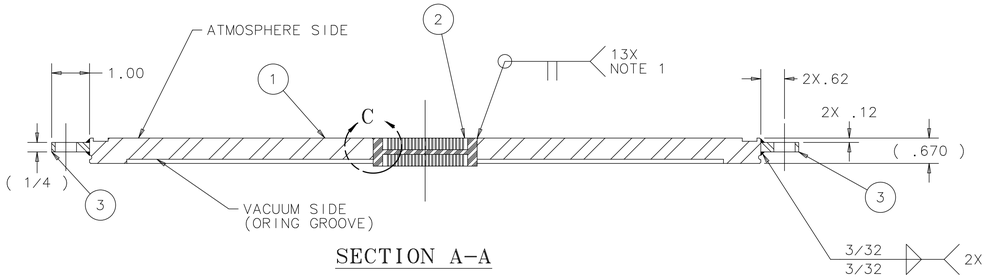

SECTION A-A

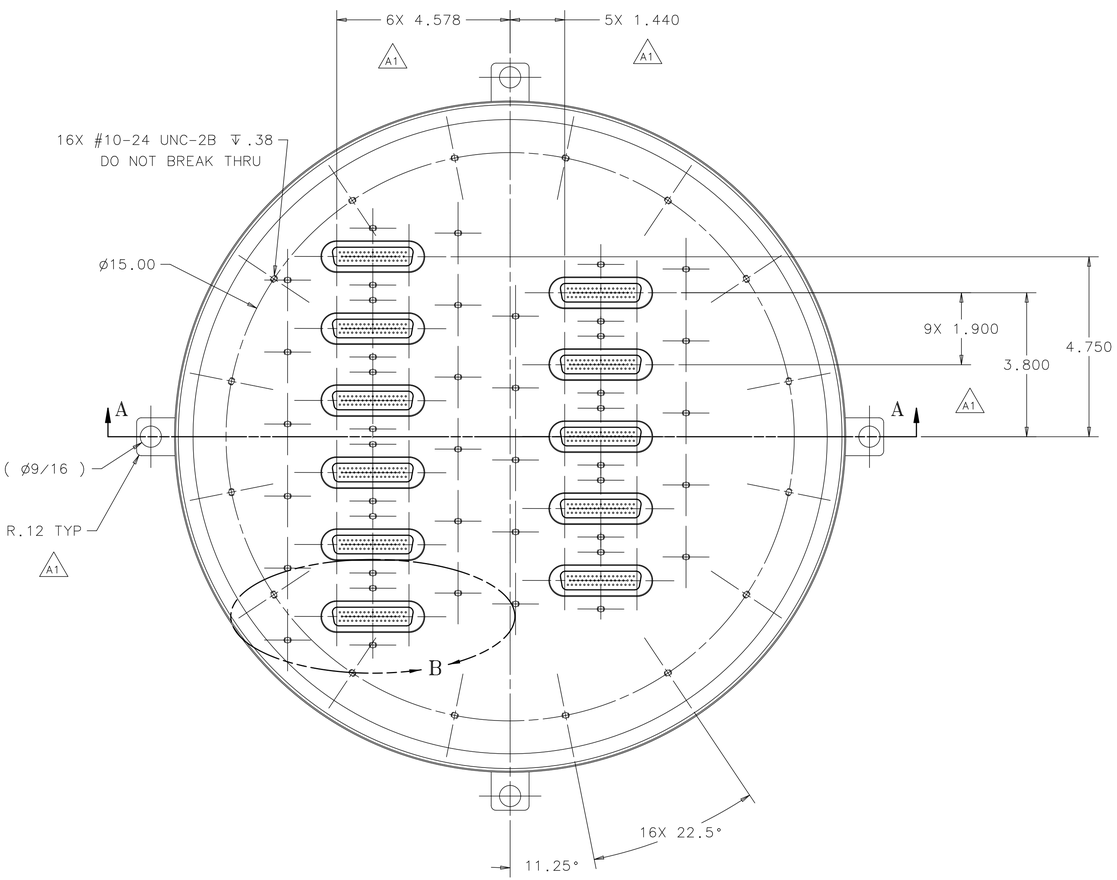

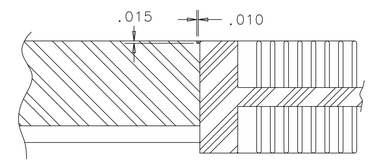

DETAIL C
WELD RELIEF
13 PLCS
SCALE: 2X

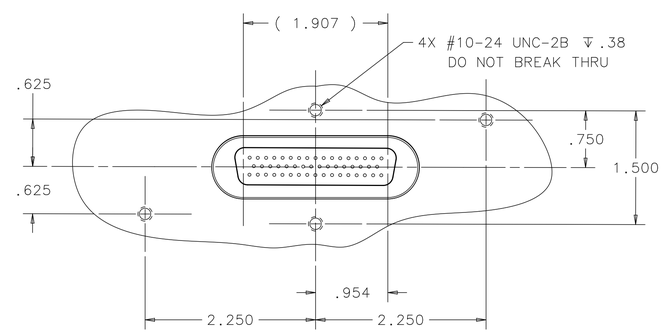

DETAIL B
13 PLCS
SCALE: FULL

NOTE:

1. VACUUM TEST...NO LEAK SHALL BE DETECTABLE ON THE MOST SENSITIVE SCALE OF A HELIUM LEAK DETECTOR WITH A MINIMUM SENSITIVITY OF 10^{-9} ATM CC/SEC.

ITEM	PART NO.	DESCRIPTION OR SIZE	QTY.
3	COML	RECTANGLE, 1/4 X 1.00 X 1.00 LG W/ø9/16" CLRNCE HOLE, STN. STL	4
2	COML	CONNECTOR, 50 PIN, HERMETICALY SEALED WELDABLE	11
1	MDC PART # 812006	BLANK FLANGE, ISO ORING FLANGE FOR 16" O.D. TUBE, 17.72 O.D., STN. STL.	1

PARTS LIST

UNLESS OTHERWISE SPECIFIED			ORIGINATOR	R.SCHMITT	15-AUG-2006
.XX	.XXX	ANGLES	DRAWN	D.FRIEND	15-AUG-2006
± .03	± .015	± .5°	CHECKED	R.L.SCHMITT	15-AUG-2006
			APPROVED	R.L.SCHMITT	15-AUG-2006

1. BREAK ALL SHARP EDGES .015 MAX.
2. DO NOT SCALE DRAWING.
3. DIMENSIONS BASED UPON ASME Y14.5M-1994
4. MAX. ALL MACH. SURFACES 125
5. DRAWING UNITS: U.S. INCH

USED ON

MATERIAL
SEE PARTS LIST ABOVE

FERMI NATIONAL ACCELERATOR LABORATORY
UNITED STATES DEPARTMENT OF ENERGY

PPD/MECHANICAL DEPARTMENT
CDMS BREAKOUT BOX
CONNECTOR FLANGE ASSEMBLY

SCALE	DRAWING NUMBER	SHEET	REV
1:2 & AS NOTED	3891.300-MD-435989	1 OF 1	A

CREATED WITH : Ideas12NXSeries | GROUP: PPD/MECHANICAL DEPARTMENT

NOTICE: IMAGE OBTAINED FROM FERMILAB WEB SITE

This information is provided for REFERENCE use only. Not for MANUFACTURE, or DESIGN INFORMATION. All information contained in this document represents work sponsored by an agency of the U.S. Government. Neither the U.S. Government nor any agency thereof, nor Universities Research Association, Inc., nor any of their employees or officers, makes any warranty, express or implied, or assumes any legal liability or responsibility for the accuracy, completeness, or usefulness of any information, apparatus, product or process disclosed, or represents that its use would not infringe privately owned rights.