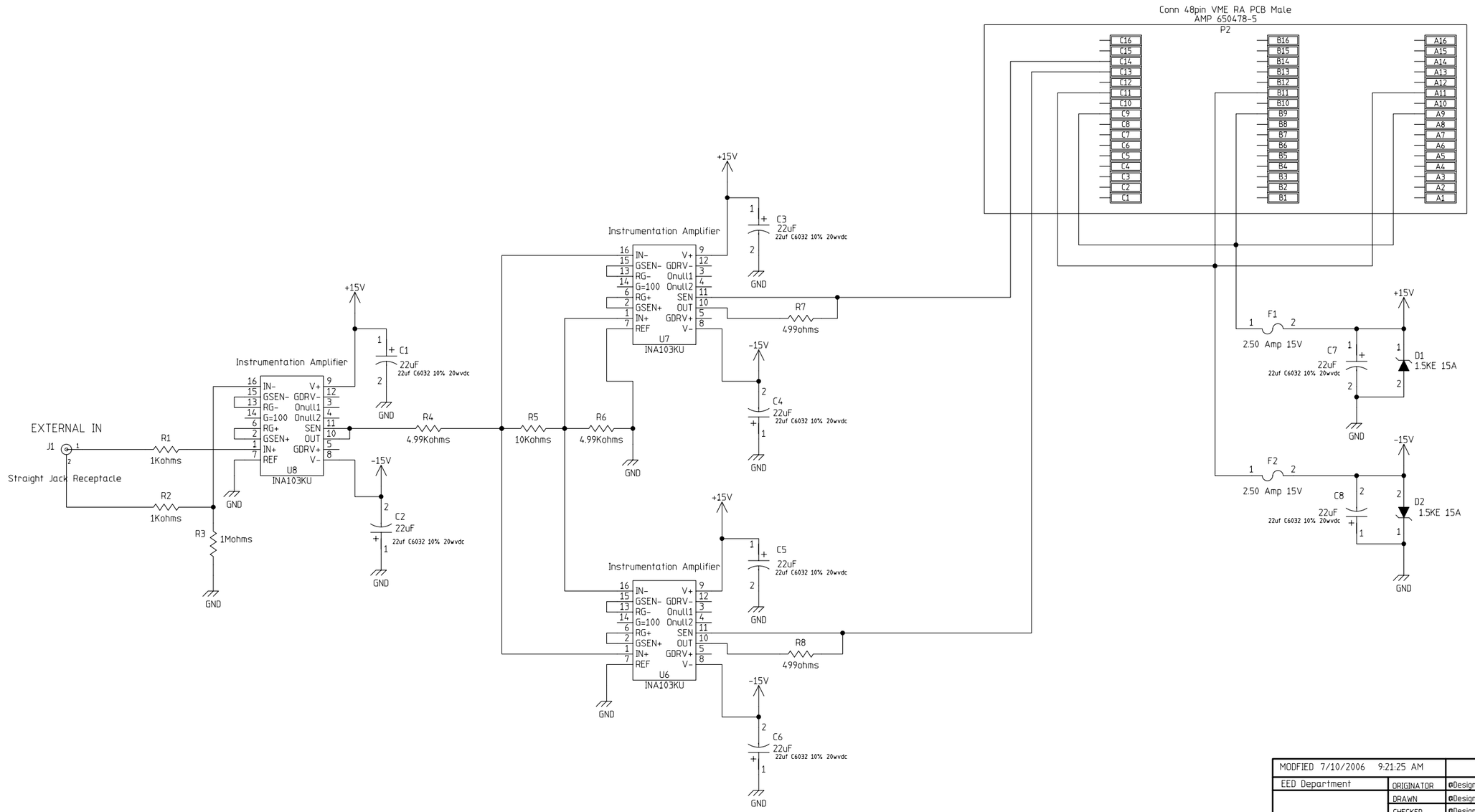

MODIFIED 7/10/2006 9:21:25 AM			
EED Department	ORIGINATOR	@Designer_1	DATE @Designer_2
	DRAWN	@Designer_3	DATE @Designer_4
	CHECKED	@Designer_5	DATE @Designer_6
	APPROVED	@Designer_7	DATE @Designer_8

Fermi National Accelerator Laboratory
United States Department of Energy

@ProjName

CDMS AUXILIARY BOARD

SIZE	DRAWING NUMBER		REV
D	@Designer_9	Schematic Page 01 of 01	@Designer_10

H=8ND; V=4LA