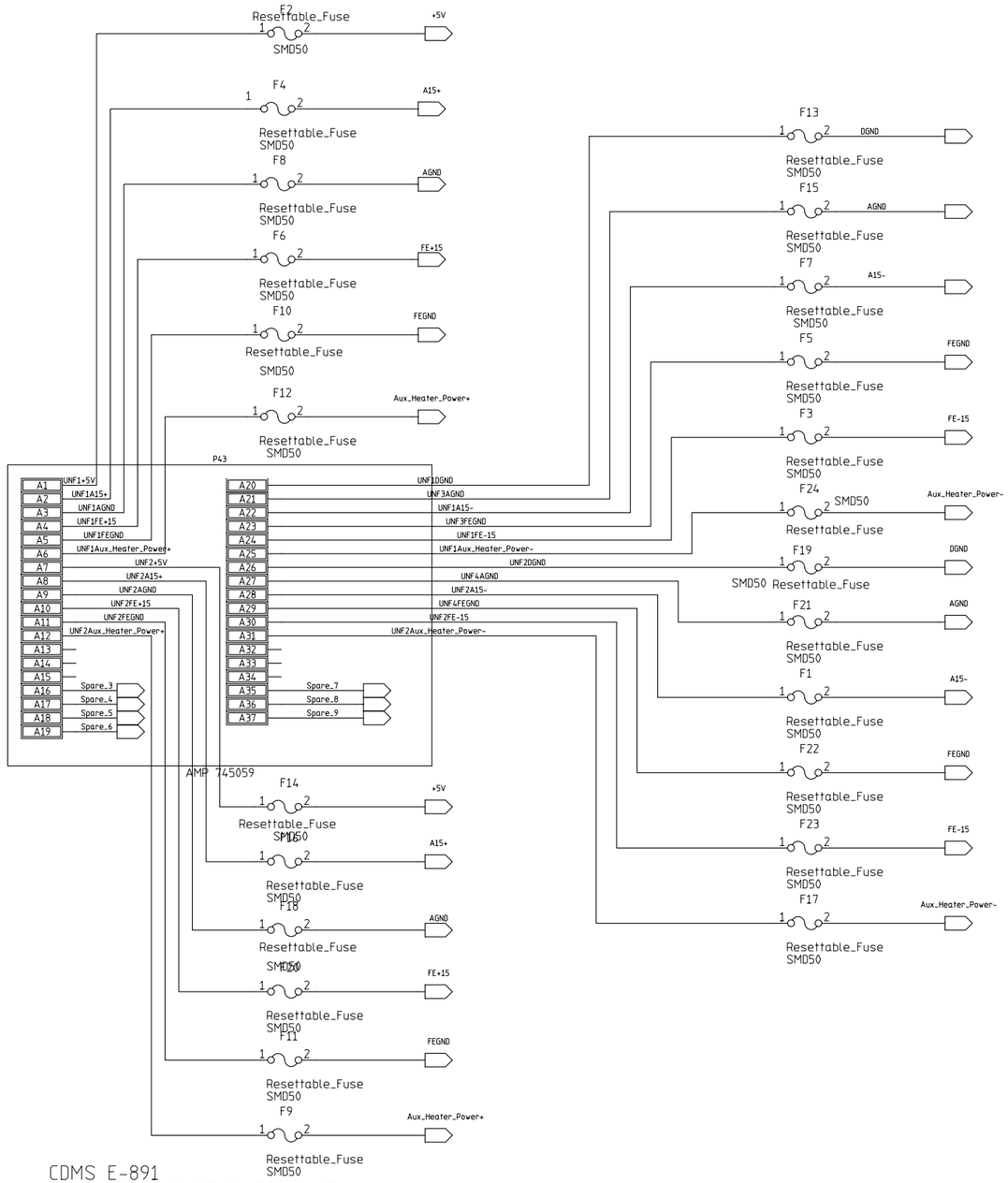

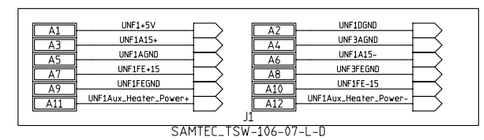

CDMS E-891
ZIP & RTF LOWER BACKPLANE

MODIFIED 05:47:13 PM 01/07/2002					
UNLESS OTHERWISE SPECIFIED			ORIGINATOR	M.Haldeman	3/14/2001
FRACTIONS	DECIMALS	ANGLES	DRAWN	N.Moibenko	3/14/2001
			CHECKED		
			APPROVED		

1. BREAK ALL SHARP EDGES 1/64 MAX.
2. DO NOT SCALE DWG.
3. DIMENSIONING IN ACCORD WITH ANSI Y14.5 STD's.

√ MAX. ALL MACHINED SURFACES

USED ON

MATERIAL

Fermi National Accelerator Laboratory
United States Department of Energy

C:\cdms_7ubackplane\CDMS_7U_backplane\CDMS_7U_backplane.prj

CDMS E-891
ZIP & RTF
LOWER BACKPLANE

SIZE	SCALE	FILMED	DRAWING NUMBER	PAGE 07 of 08	REV
D	1:1				A

H=8ND; V=4LA