REV.	DESCRIPTION	DRAWN / APPD.	DATE / DATE

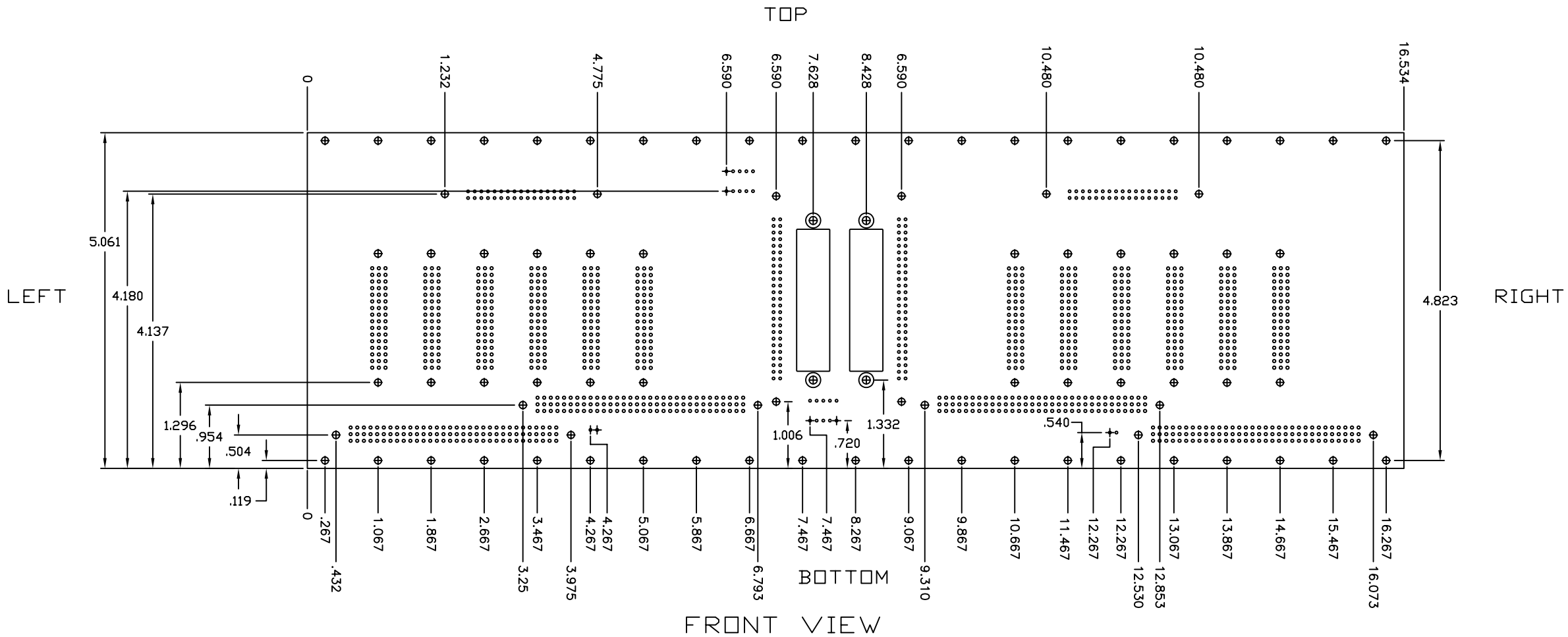

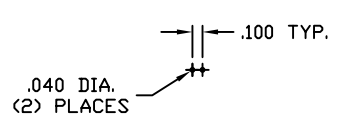

PC BOARD PATTERN

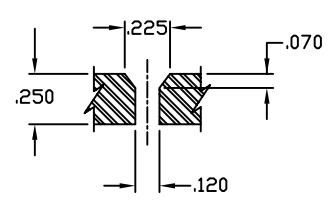

SECTION A-A

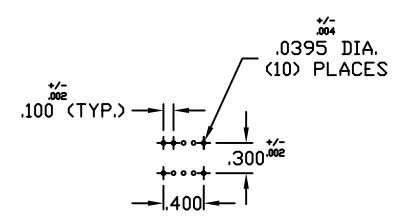

PC BOARD PATTERN

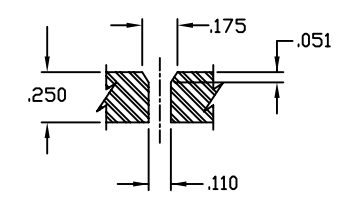

SECTION B-B

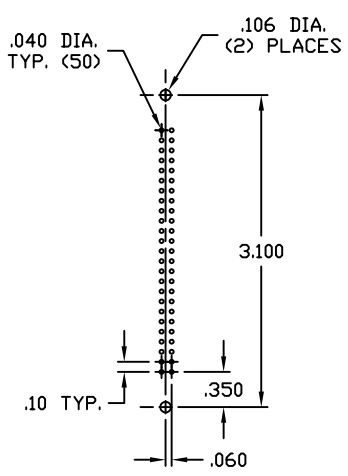

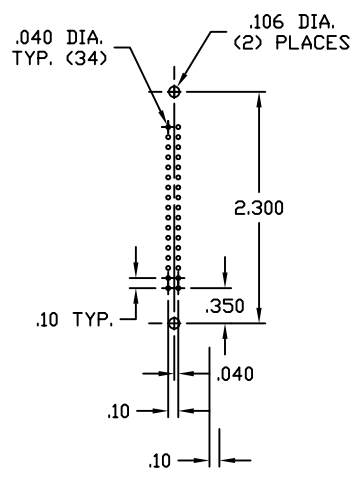

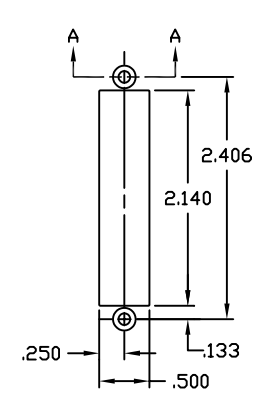

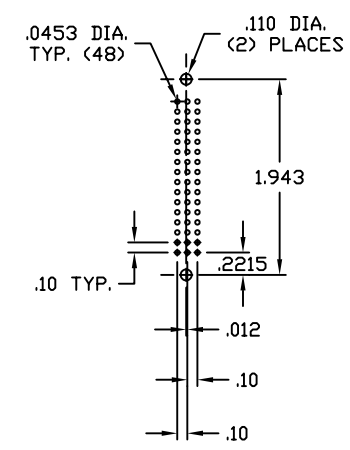

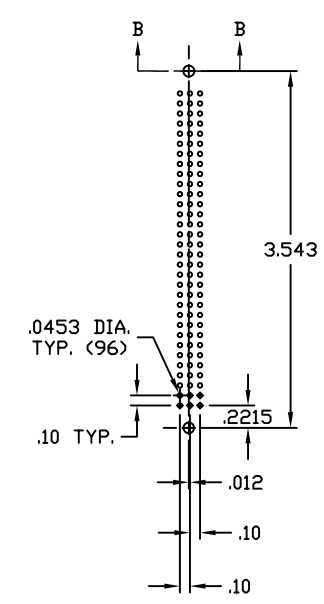

TOLERANCE: DECIMAL +/-.005 UNLESS OTHERWISE SPECIFIED.

ORIGINATOR	M. HALDEMAN	3/28/01	CHECKED		
DRAWN	N. CUNY	3/28/01	APPROVED		

FERMI NATIONAL ACCELERATOR LABORATORY
UNITED STATES DEPARTMENT OF ENERGY

PPD/ETT/ES-CDMS (E891)
RTF 10U CRATE, 3U BACKPLANE
MACHINE DRAWING

SCALE	SOFTWARE	DRAWING NUMBER	REV.
FULL	AUTOCAD		