VMIC ADC #2 Upper

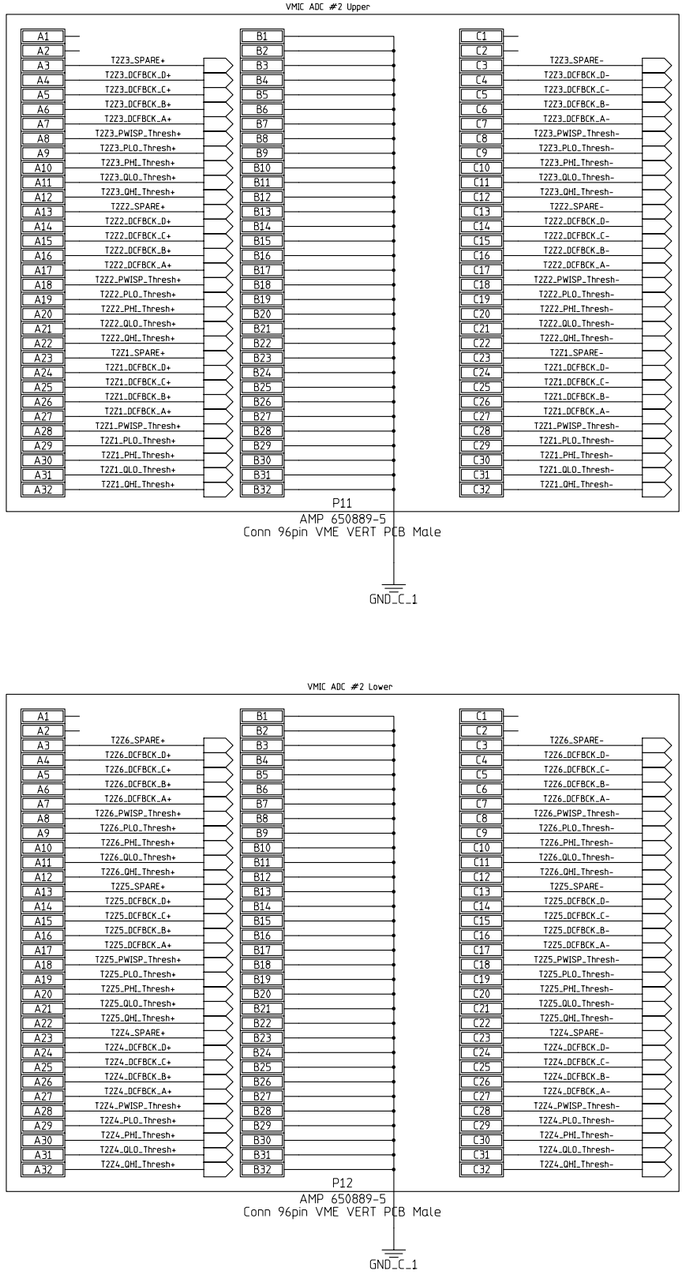

Scaler #1 Lower

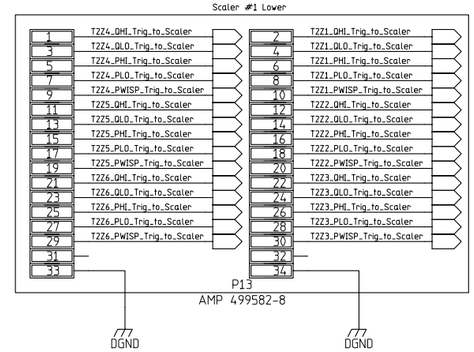

Trigger Conditoner Right

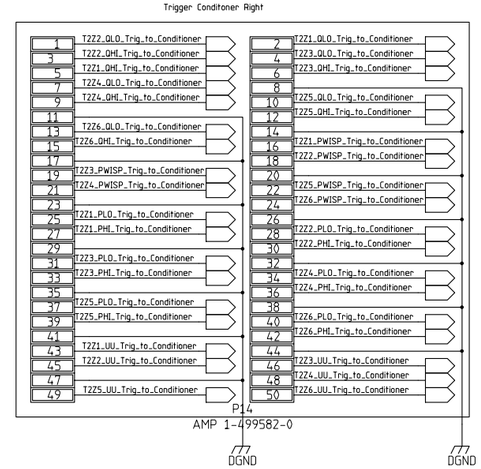

VMIC ADC #2 Lower

MODIFIED 02:55:21 PM 11/28/2001				
UNLESS OTHERWISE SPECIFIED			ORIGINATOR	M.Haldeman
FRACTIONS	DECIMALS	ANGLES	DRAWN	N.Moibenko
			CHECKED	
1. BREAK ALL SHARP EDGES 1/64 MAX.			APPROVED	
2. DO NOT SCALE DWG.			USED ON	
3. DIMENSIONING IN ACCORD WITH ANSI Y14.5 STD's.			MATERIAL	
√ MAX. ALL MACHINED SURFACES				

Fermi National Accelerator Laboratory
United States Department of Energy

C:\cdms_rtf_backplane\RTF_Backplane_new\RTF_Backplane_new.prj

RTF BACKPLANE

SIZE	SCALE	FILMED	DRAWING NUMBER	PAGE 03 of 04	REV
D	1:1				A

H=8ND; V=4LA