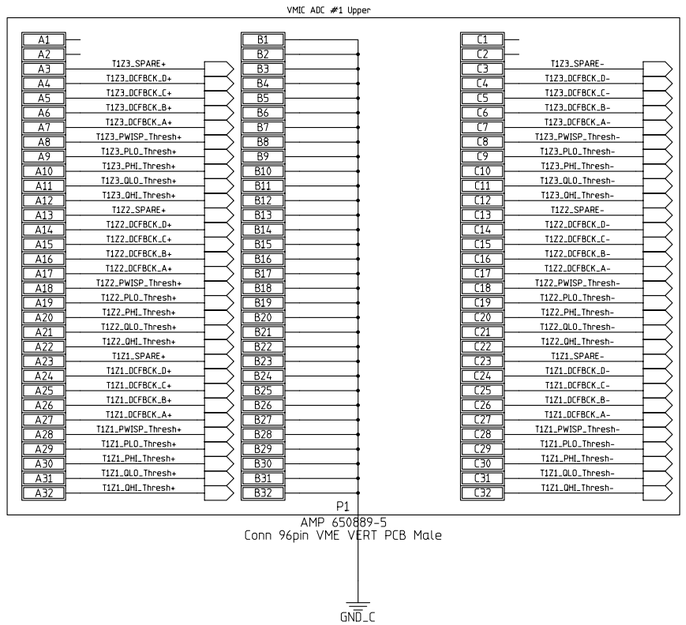

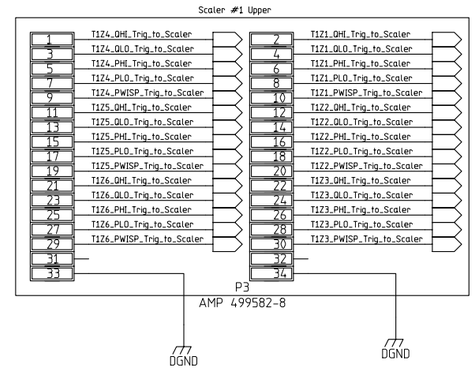

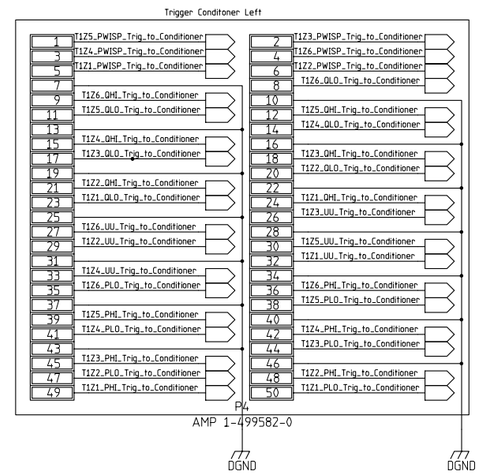

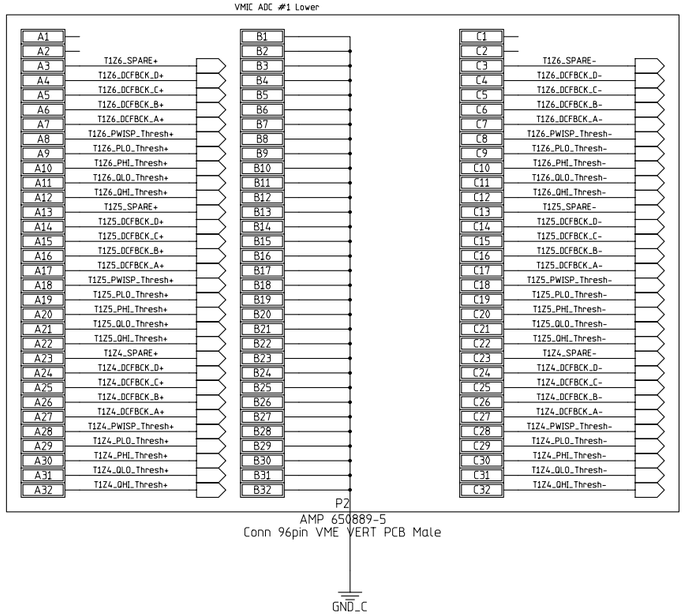

MODIFIED 02:52:28 PM 11/28/2001				
UNLESS OTHERWISE SPECIFIED			ORIGINATOR	M.Haldeman
FRACTIONS	DECIMALS	ANGLES	DRAWN	N.Moibenko
			CHECKED	
			APPROVED	

1. BREAK ALL SHARP EDGES 1/64 MAX.
2. DO NOT SCALE DWG.
3. DIMENSIONING IN ACCORD WITH ANSI Y14.5 STD's.

√ MAX. ALL MACHINED SURFACES

USED ON

MATERIAL

Fermi National Accelerator Laboratory
United States Department of Energy

C:\cdms_rtf_backplane\RTF_Backplane_new\RTF_Backplane_new.prj

RTF BACKPLANE

SIZE	SCALE	FILMED	DRAWING NUMBER	PAGE 01 of 04	REV
D	1:1				A

H:8ND; V:4LA