REV.	DESCRIPTION	DRAWN	DATE
		APPD.	DATE

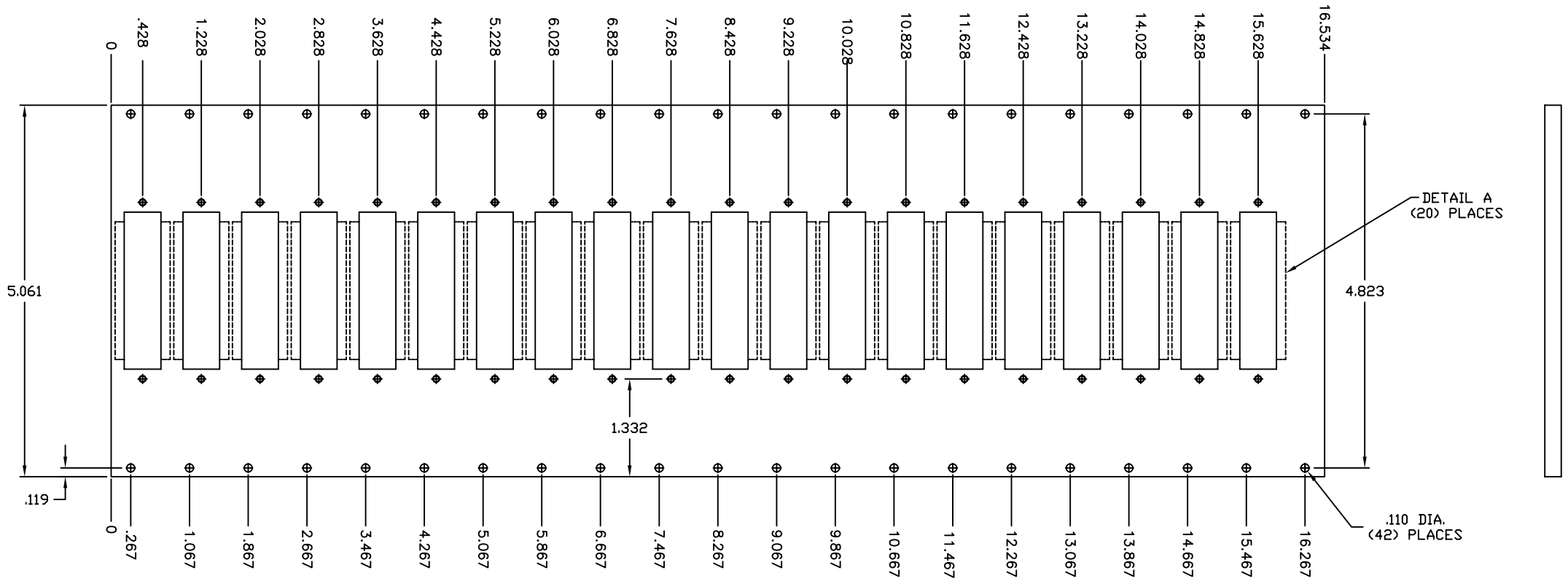

VIEWED FROM FRONT OF SUBRACK

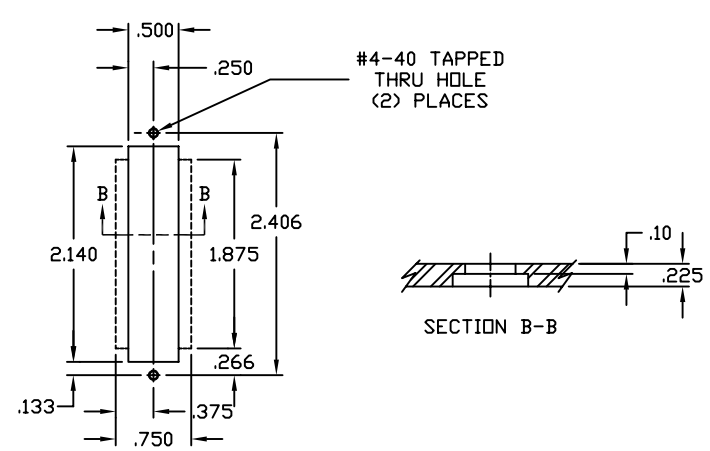

DETAIL A
FULL SCALE

TOLERANCE: DECIMAL +/-.005 UNLESS OTHERWISE SPECIFIED.

MATERIAL: STD. YELLOW BRASS

ORIGINATOR	W. JOHNSON	7/30/01	CHECKED		
DRAWN	N. CUNY	7/30/01	APPROVED		

FERMI NATIONAL ACCELERATOR LABORATORY
UNITED STATES DEPARTMENT OF ENERGY

PPD/ETT/ES-CDMS (E891)
ZIP TOP PLATE

SCALE	SOFTWARE	DRAWING NUMBER	REV.
FULL	AUTOCAD		