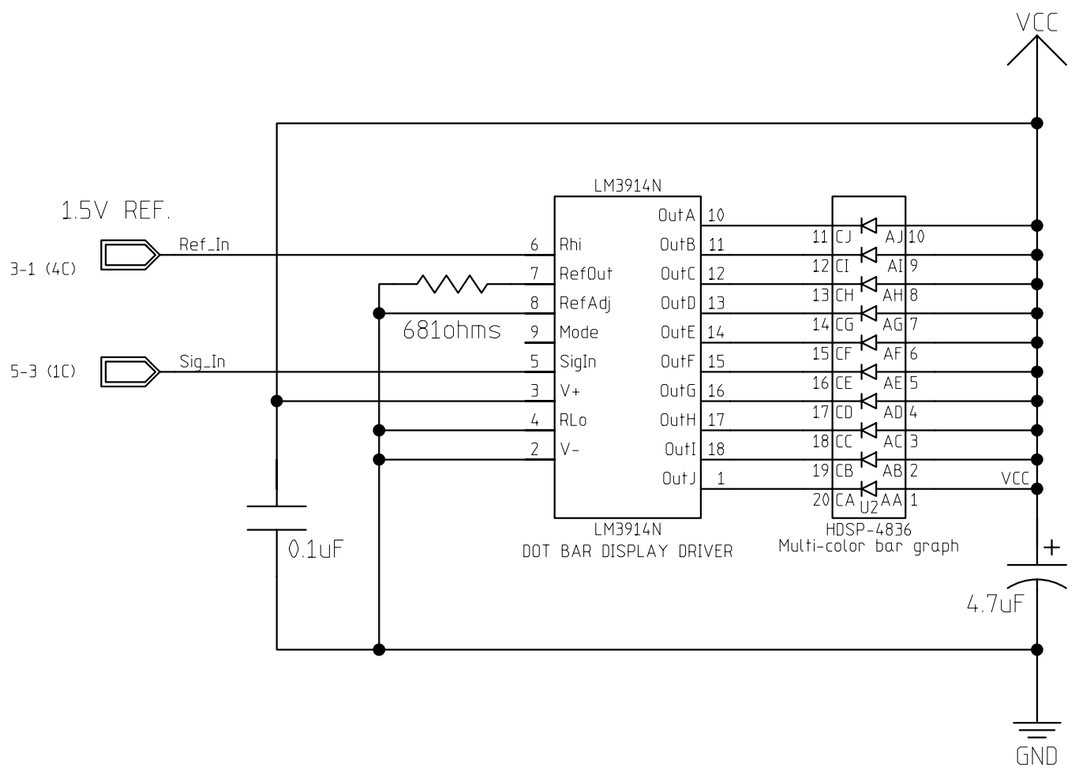

MODFIED: 09:45:29 AM 01/10/2002				
UNLESS OTHERWISE SPECIFIED			ORIGINATOR	MERLE HALDEMAN	10/06/00
FRACTIONS	DECIMALS	ANGLES	DRAWN	STEPHEN MORRISON	12/04/00
			CHECKED		
1. BREAK ALL SHARP EDGES 1/64 MAX.			APPROVED		
2. DO NOT SCALE DWG.			USED ON		
3. DIMENSIONING IN ACCORD WITH ANSI Y14.5 STD's.			MATERIAL		
√ MAX. ALL MACHINED SURFACES					

Fermi National Accelerator Laboratory
United States Department of Energy

@ProjName

FERMILAB PPD/ ETT/ ES CDMS (E-891) POWER SUPPLY VERSION 2 MONITOR BOARD +15V FRONT END CURRENT DISPLAY (6-3)

SIZE	SCALE	FILMED	DRAWING NUMBER	PAGE 01 of 01	REV
B	1:1		2563.000-ED-		B

H=2LA; V=2LA