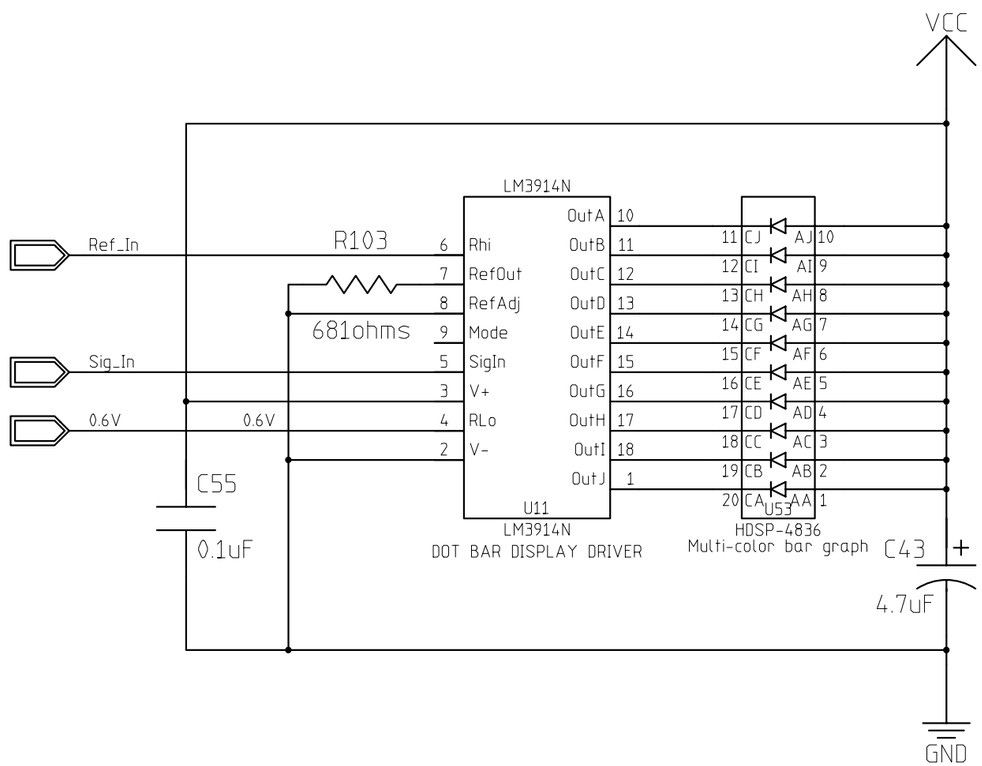


# Heater Voltage Display

| | | | | | |
|---|---|---|---|---|---|
| MODFIED: 3:10:00 PM 5/29/2001 | | | | | |
| UNLESS OTHERWISE SPECIFIED | | | ORIGINATOR | MERLE HALDEMAN | 10/06/00 |
| FRACTIONS | DECIMALS | ANGLES | DRAWN | STEPHEN MORRISON | 12/04/00 |
| | | | CHECKED | | |
| 1. BREAK ALL SHARP EDGES 1/64 MAX. | | | APPROVED | | |
| 2. DO NOT SCALE DWG. | | | USED ON | | |
| 3. DIMENSIONING IN ACCORD WITH ANSI Y14.5 STD's. | | | MATERIAL | | |
| MAX. ALL MACHINED SURFACES | | | | | |

Fermi National Accelerator Laboratory
United States Department of Energy

C:\cdms\power_supply_project\PSv2_Brd\PSv2_Brd.prj

FERMILAB PPD/ ETT/ ES CDMS (E-891)
POWER SUPPLY VERSION 2 MONITOR BOARD
VOLTAGE DISPLAY

| SIZE | SCALE | FILMED | DRAWING NUMBER | PAGE 01 of 01 | REV |
|---|---|---|---|---|---|
| B | 1:1 | | 2563.000-ED- | | B |

H=2LA; V=2LA