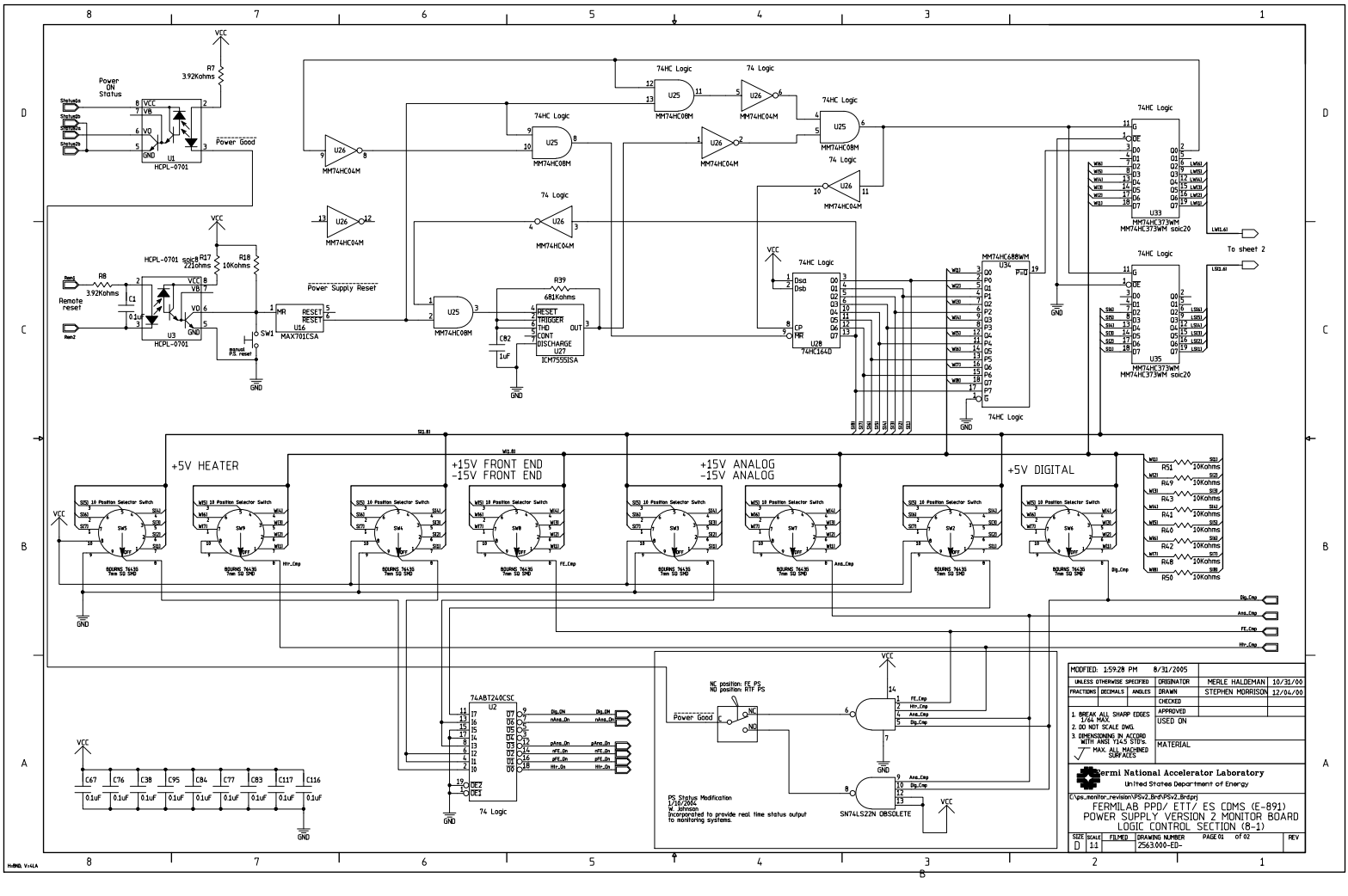
Power ON Status
Power Good
HCPL-0701
Remote reset
Power Supply Reset
MAX701CSA
manual PS reset
MM74HC04M
MM74HC08M
74HC Logic
74 Logic
ICM7555ISA
MM74HC688WM
74HC640
MM74HC373WM
To sheet 2
+5V HEATER
+15V FRONT END
-15V FRONT END
+15V ANALOG
-15V ANALOG
+5V DIGITAL
10 Position Selector Switch
74ABT240CSC
SN74LS22N OBSOLETE
NC position: FE_PS
NO position: RTF PS
PS Status Modification
1/16/2006
W. Johnson
Incorporated to provide real time status output to monitoring systems.
MODIFIED: 1:59:28 PM 8/31/2005
UNLESS OTHERWISE SPECIFIED
FRACTIONS DECIMALS ANGLES
DRAWN STEPHEN MORRISON 12/04/00
CHECKED
APPROVED
USED ON
MATERIAL
1. BREAK ALL SHARP EDGES 1/64 MAX.
2. DO NOT SCALE DWG.
3. DIMENSIONING IN ACCORD WITH ANSI Y14.5 STDs.
MAX. ALL MACHINED SURFACES
Fermi National Accelerator Laboratory
United States Department of Energy
FERMILAB PPD/ ETT/ ES COMS (E-891)
POWER SUPPLY VERSION 2 MONITOR BOARD
LOGIC CONTROL SECTION (B-1)
SIZE D SCALE 1:1 FILMED DRAWING NUMBER 2563.000-ED- PAGE 01 of 02 REV

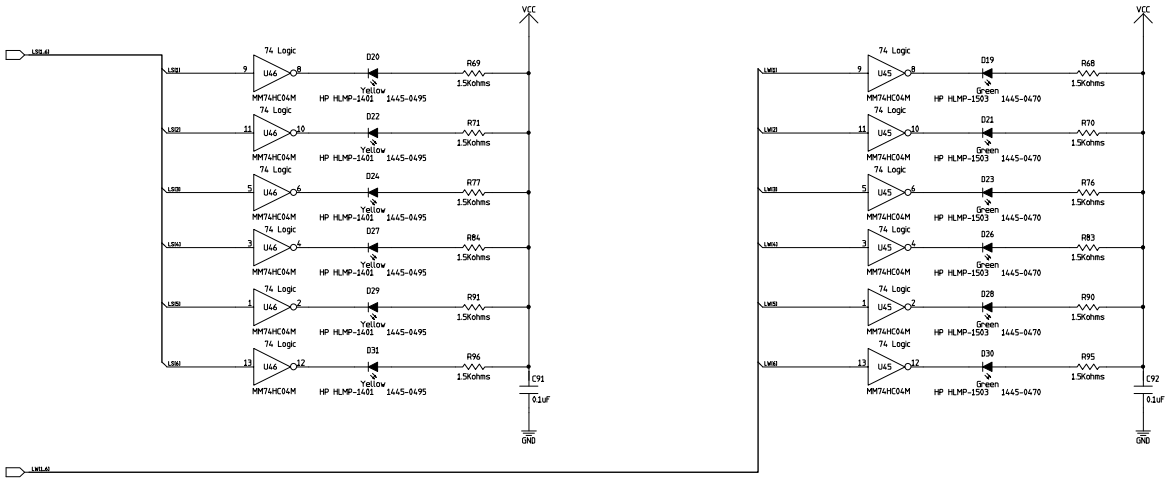

MODIFIED 10:19:10 AM 8/23/2005					
UNLESS OTHERWISE SPECIFIED			ORIGINATOR	MERLE HALDEMAN	10/31/00
FRACTIONS	DECIMALS	ANGLES	DRAWN	STEPHEN MORRISON	12/18/00
			CHECKED		
1. BREAK ALL SHARP EDGES 1/64 MAX. 2. DO NOT SCALE DWG. 3. DIMENSIONING IN ACCORD WITH ANSI Y14.5 STD's. MAX. ALL MACHINED SURFACES			APPROVED		
			USED ON		
			MATERIAL		

Fermi National Accelerator Laboratory
United States Department of Energy

C:\ps_monitor_revision\PSv2_Brd\PSv2_Brd.prj

FERMILAB PPD/ ETT/ ES CDMS (E-891)
POWER SUPPLY VERSION 2 MONITOR BOARD
LOGIC CONTROL SECTION (8-1)

SIZE	SCALE	FILMED	DRAWING NUMBER	PAGE 02 of 02	REV
D	1:1				A

H=8MD, V=4LA