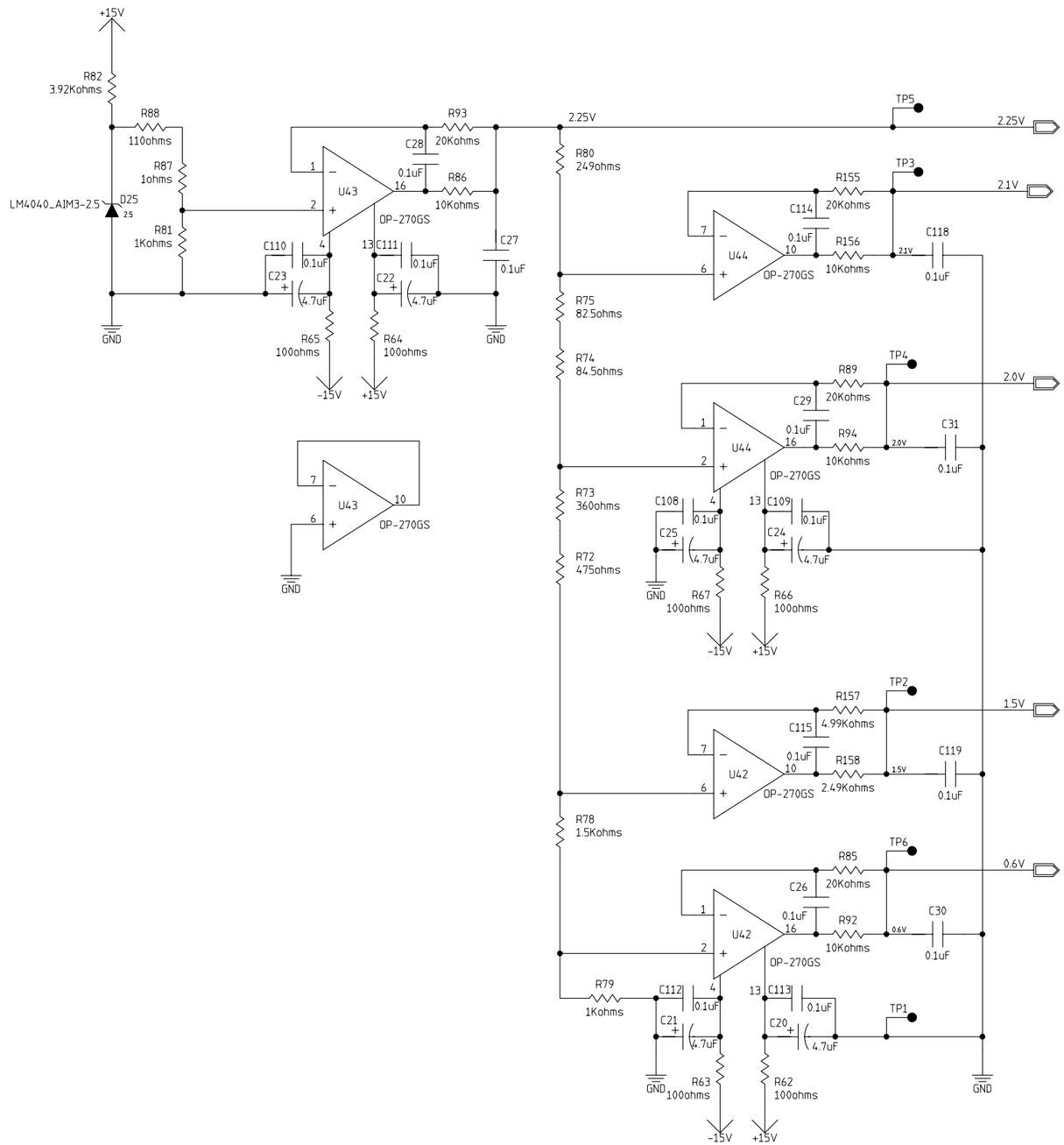

MODIFIED: 08:19:46 AM 07/20/2001				
UNLESS OTHERWISE SPECIFIED			ORIGINATOR	MERLE HALDEMAN	10/06/00
FRACTIONS	DECIMALS	ANGLES	DRAWN	STEPHEN MORRISON	12/04/00
			CHECKED		
1. BREAK ALL SHARP EDGES 1/64 MAX.			APPROVED		
2. DO NOT SCALE DWG.			USED ON		
3. DIMENSIONING IN ACCORD WITH ANSI Y14.5 STD's.					
MAX. ALL MACHINED SURFACES			MATERIAL		

Fermi National Accelerator Laboratory
United States Department of Energy

ProjName
FERMILAB PPD/ ETT/ ES VDMS (E-891)
POWER SUPPLY VERSION 2 MONITOR BOARD
VOLTAGE REFERENCES (3-1)

SIZE	SCALE	FILMED	DRAWING NUMBER	PAGE 01 of 01	REV
D	1:1		2563.000-ED-		B

H=8ND; V=4LA