8 x 1 Signal Relay MUX

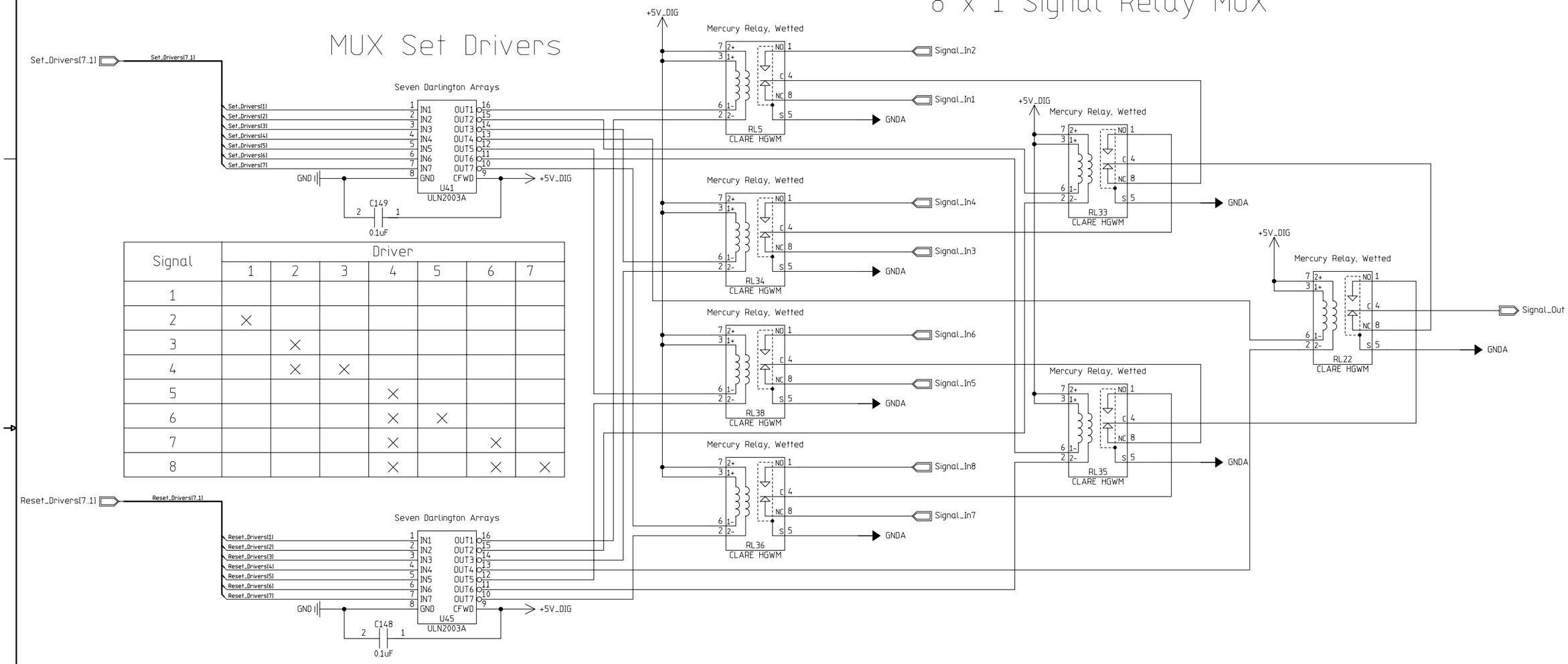

Signal	Driver 1	2	3	4	5	6	7
1							
2	X						
3		X					
4		X	X				
5				X			
6				X	X		
7				X		X	
8				X		X	X

Test Point 1

MODIFIED 07/19/2002 01:25:07 PM		Hierarchical_Page @Hierarchical_Page of @Hierarchical_Page Total	
EED Department	ORIGINATOR	@Designer_1	DATE @Designer_2
CDMS	DRAWN	@Designer_3	DATE @Designer_4
	CHECKED	@Designer_5	DATE @Designer_6
	APPROVED	@Designer_7	DATE @Designer_8

Fermi National Accelerator Laboratory
United States Department of Energy

C:\cdms_stm\stm\CDMS_STM_V2a\CDMS_STM_V2a.prj

CDMS System Test Module (CDMS-STM)
8 x 1 Relay Multiplexor Schematic

SIZE	DRAWING NUMBER		REV
D	@Designer_9	Schematic Page 01 of 01 @Designer_10	

H=8ND; V=4LA