# 8 x 1 Signal Relay MUX

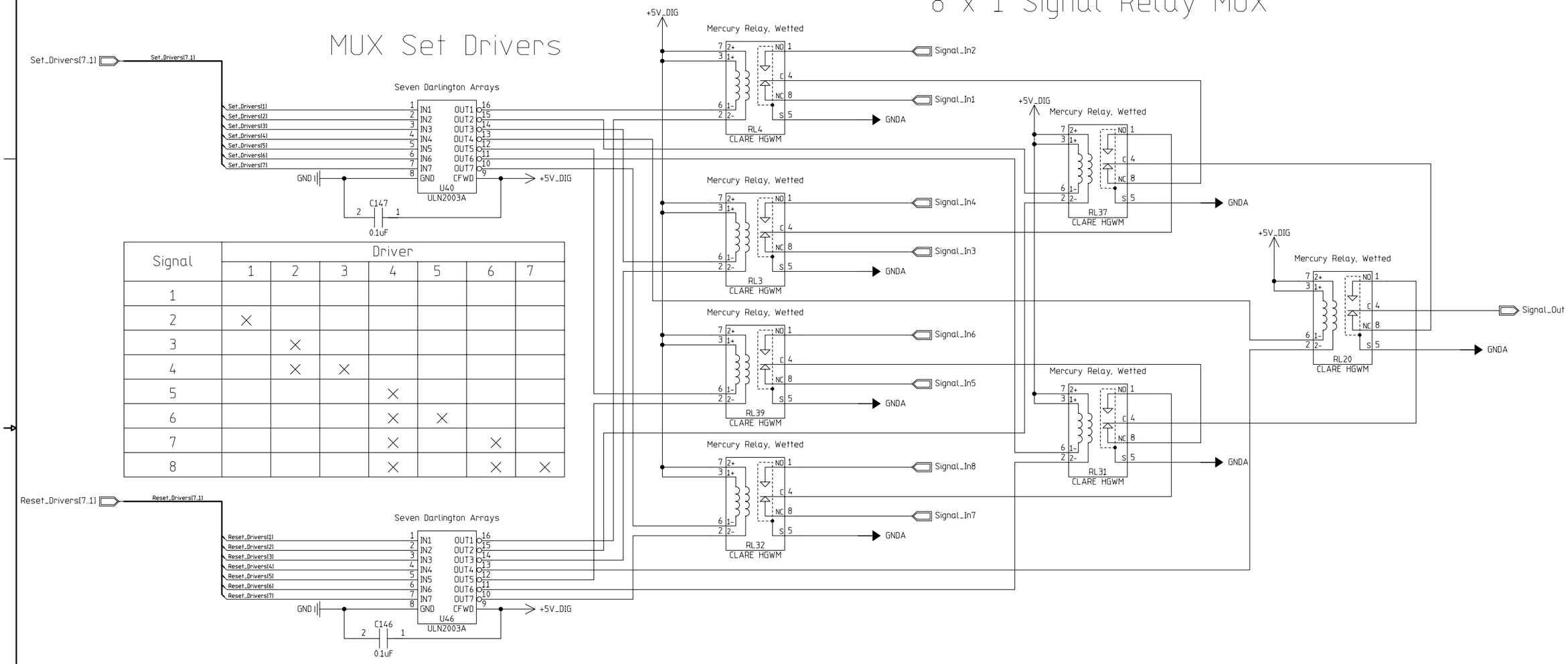


| Signal | Driver 1 | 2 | 3 | 4 | 5 | 6 | 7 |
|---|---|---|---|---|---|---|---|
| 1 | | | | | | | |
| 2 | X | | | | | | |
| 3 | | X | | | | | |
| 4 | | X | X | | | | |
| 5 | | | | X | | | |
| 6 | | | | X | X | | |
| 7 | | | | X | | X | |
| 8 | | | | X | | X | X |

Test Point 2

| | | | |
|---|---|---|---|
| MODIFIED 07/19/2002 01:25:07 PM | | Hierarchical_Page @Hierarchical_Page of @Hierarchical_Page Total | |
| EED Department | ORIGINATOR | @Designer_1 | DATE @Designer_2 |
| CDMS | DRAWN | @Designer_3 | DATE @Designer_4 |
| | CHECKED | @Designer_5 | DATE @Designer_6 |
| | APPROVED | @Designer_7 | DATE @Designer_8 |

Fermi National Accelerator Laboratory
United States Department of Energy

C:\cdms_stm\stm\CDMS_STM_V2a\CDMS_STM_V2a.prj

CDMS System Test Module (CDMS-STM)
8 x 1 Relay Multiplexor Schematic

| SIZE | DRAWING NUMBER | | REV |
|---|---|---|---|
| D | @Designer_9 | Schematic Page 01 of 01 @Designer_10 | |

H=8ND; V=4LA