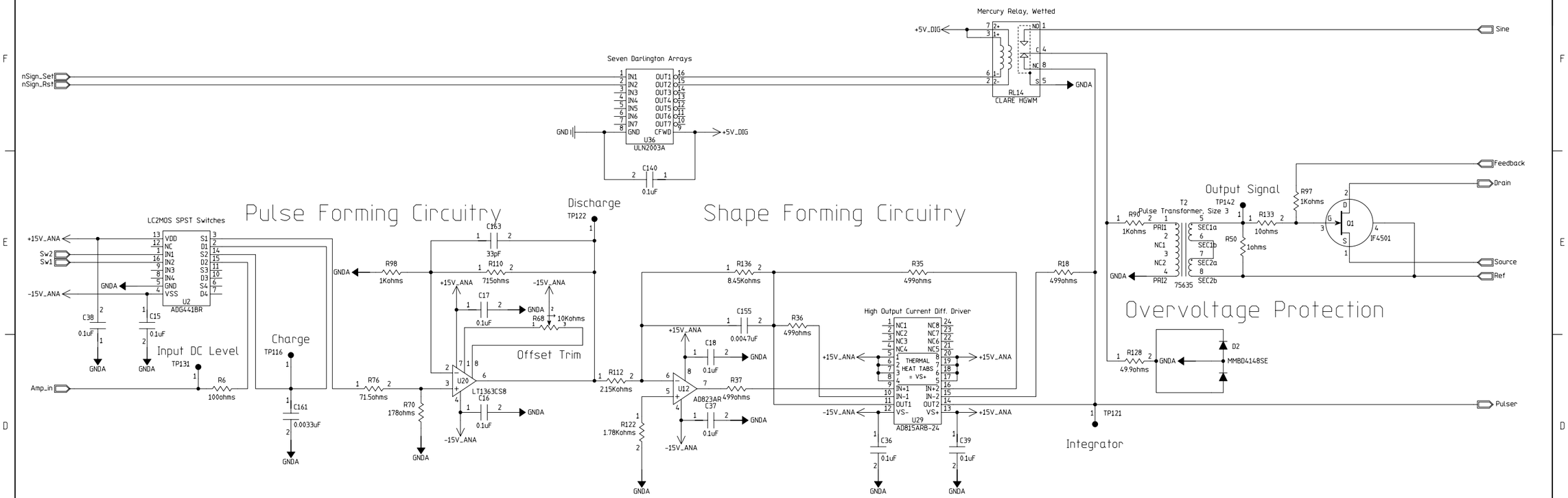


## Pulse Forming Circuitry Functional Diagram

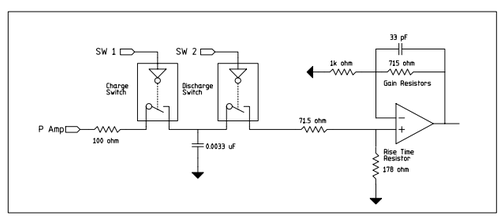


## Shape Forming Circuitry Functional Diagram

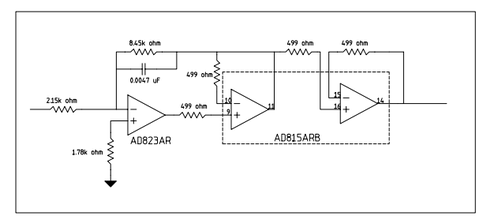


# Charge Channel Signal Diagram

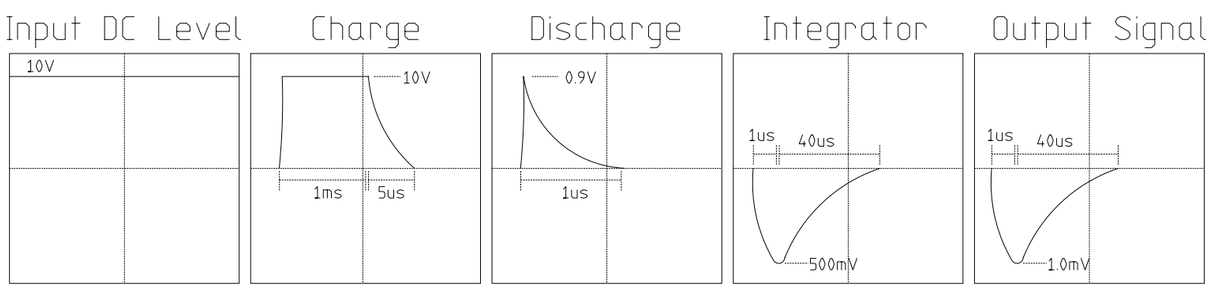


# Charge Qi

| | | | |
|---|---|---|---|
| MODIFIED 07/16/2002 02:03:59 PM | | Hierarchical_Page @HierPath @HierPage Total | |
| EED Department | ORIGINATOR | @Designer_1 | DATE @Designer_2 |
| CDMS | DRAWN | @Designer_3 | DATE @Designer_4 |
| | CHECKED | @Designer_5 | DATE @Designer_6 |
| | APPROVED | @Designer_7 | DATE @Designer_8 |

Fermi National Accelerator Laboratory
United States Department of Energy

C:\cdms_stm\stm\CDMS_STM_V2a\CDMS_STM_V2a.prj

CDMS System Test Module (CDMS-STM)
Charge Pulse Generator Schematic

| SIZE | DRAWING NUMBER | | REV |
|---|---|---|---|
| F | @Designer_9 | Schematic Page 01 of 01 | @Designer_10 |

MyBND: V:6LA