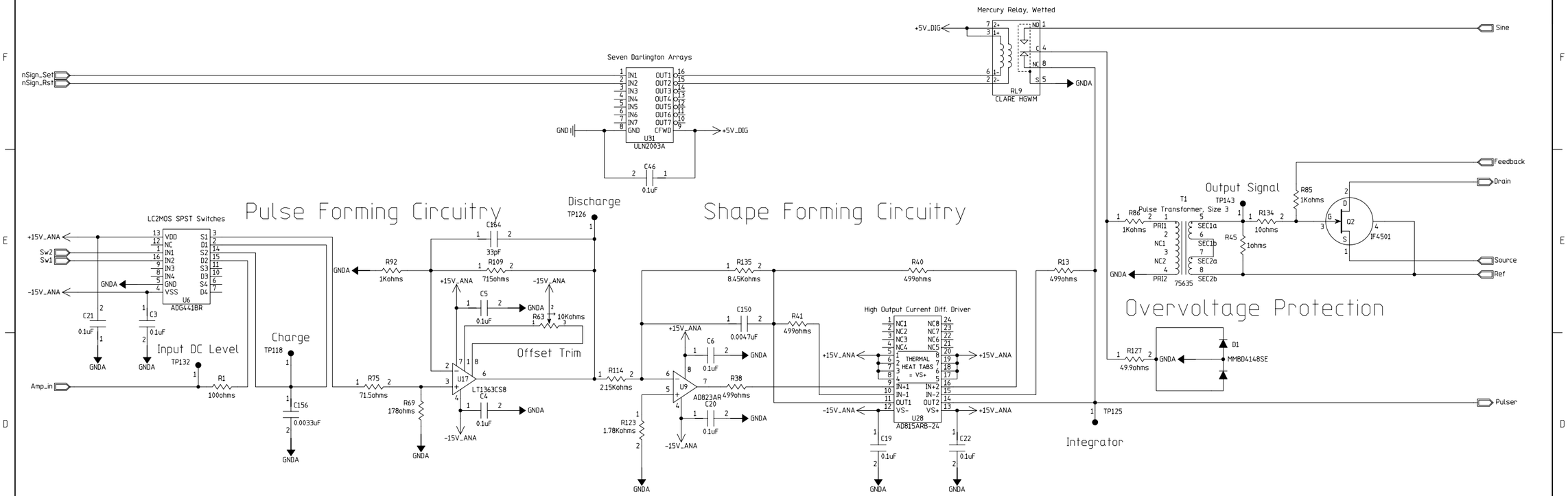

Charge Qo

MODFIED 07/16/2002 02:03:59 PM		Hierarchical_Page @Hierarchical_Page	of @Hierarchical_Total
EED Department	ORIGINATOR	@Designer_1	DATE @Designer_2
CDMS	DRAWN	@Designer_3	DATE @Designer_4
	CHECKED	@Designer_5	DATE @Designer_6
	APPROVED	@Designer_7	DATE @Designer_8

Fermi National Accelerator Laboratory
United States Department of Energy

C:\cdms_stm\stm\CDMS_STM_V2a\CDMS_STM_V2a.prj

CDMS System Test Module (CDMS-STM)
Charge Pulse Generator Schematic

SIZE	DRAWING NUMBER	Schematic Page 01 of 01	REV
F	@Designer_9	@Designer_10	

M:BND; V:6LA