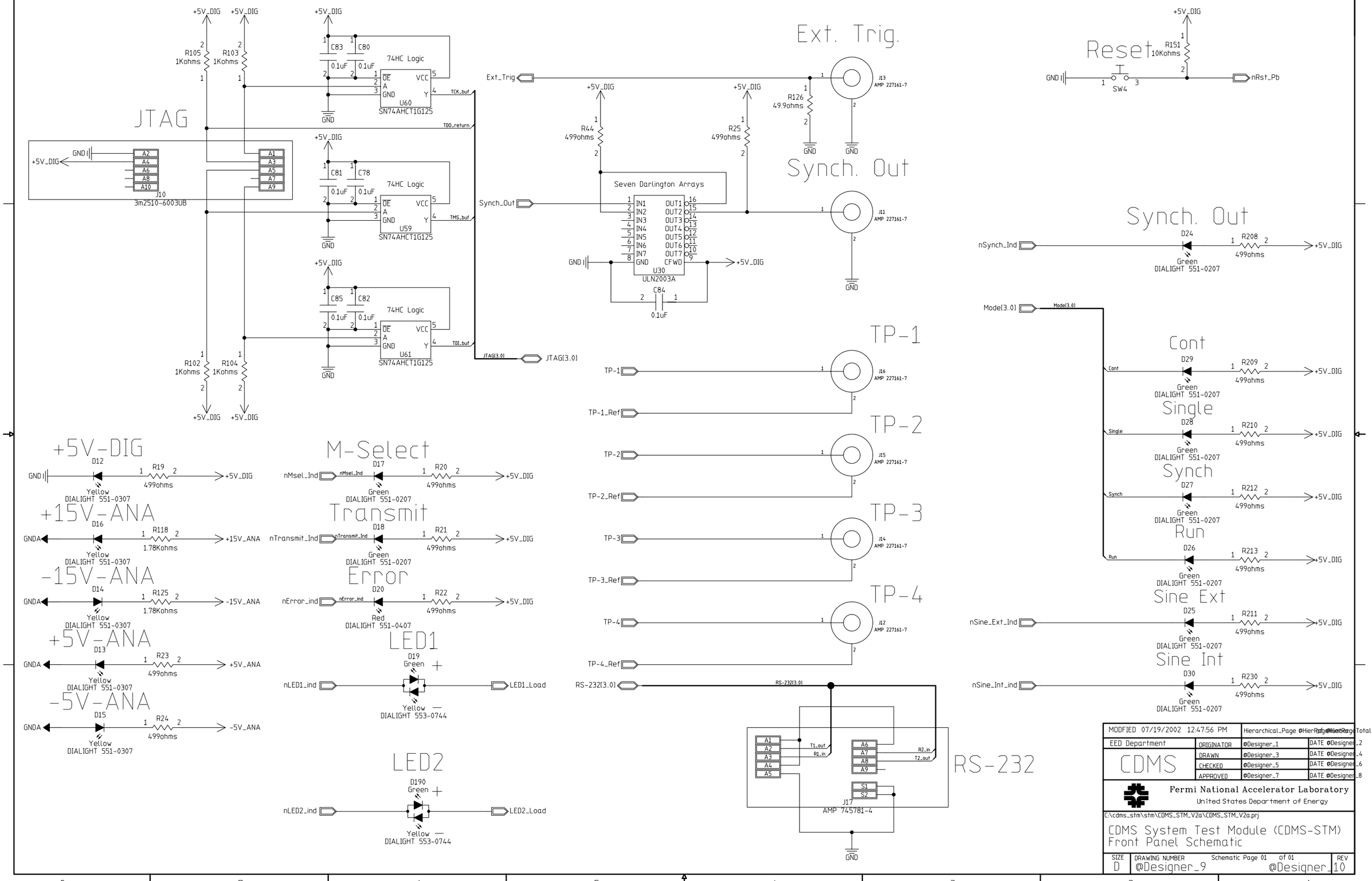

JTAG
J10
3m2510-6003UB
74HC Logic
U60
SN74AHCT1G125
U59
SN74AHCT1G125
U61
SN74AHCT1G125
Ext. Trig.
Synch. Out
Seven Darlington Arrays
U30
ULN2003A
Reset
SW4
Synch. Out
Cont
Single
Synch
Run
Sine Ext
Sine Int
TP-1
TP-2
TP-3
TP-4
RS-232
J17
AMP 745781-4
+5V-DIG
+15V-ANA
-15V-ANA
+5V-ANA
-5V-ANA
M-Select
Transmit
Error
LED1
LED2
DIALIGHT 551-0307
DIALIGHT 551-0207
DIALIGHT 551-0407
DIALIGHT 553-0744
MODFIED 07/19/2002 12:47:56 PM
EED Department
CDMS
ORIGINATOR
DRAWN
CHECKED
APPROVED
Fermi National Accelerator Laboratory
United States Department of Energy
C:\cdms_stm\stm\CDMS_STM_V2a\CDMS_STM_V2a.prj
CDMS System Test Module (CDMS-STM)
Front Panel Schematic
SIZE D
DRAWING NUMBER @Designer_9
Schematic Page 01 of 01
REV 10