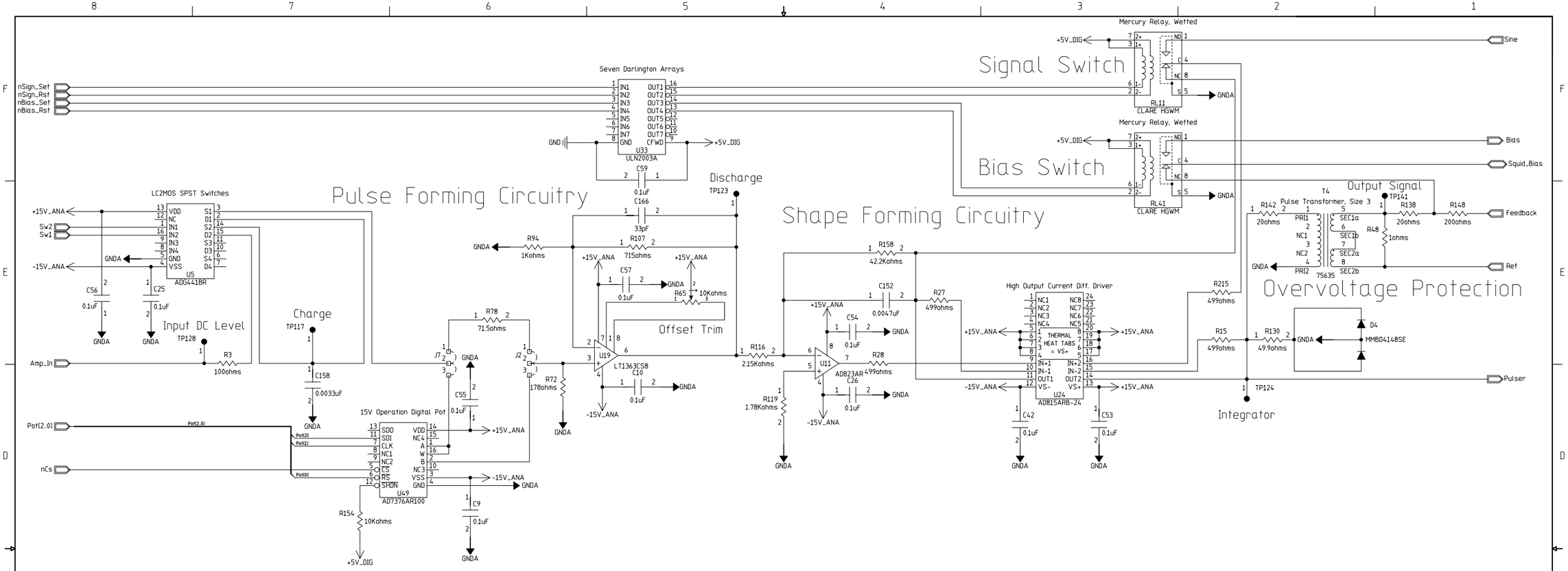

Pulse Forming Circuitry Functional Diagram

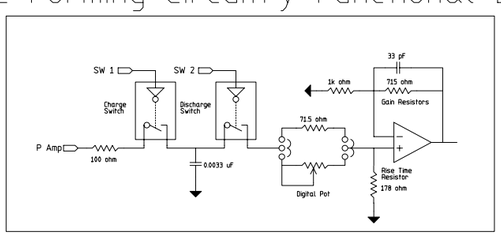

Shape Forming Circuitry Functional Diagram

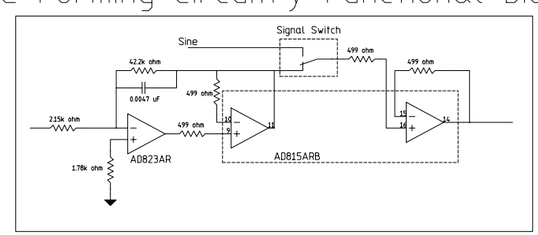

Phonon Channel Signal Diagram

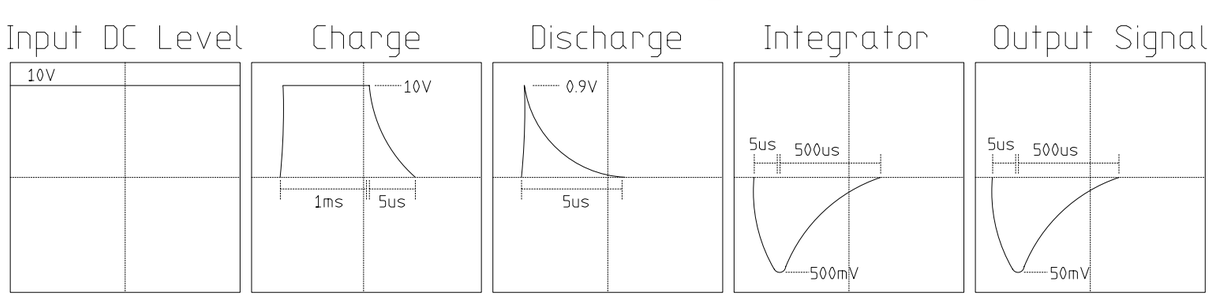

Phonon C

MODIFIED 07/16/2002 01:04:49 PM		Hierarchical_Page 01 of 01	Total
EED Department	ORIGINATOR	@Designer_1	DATE @Designer_2
CDMS	DRAWN	@Designer_3	DATE @Designer_4
	CHECKED	@Designer_5	DATE @Designer_6
	APPROVED	@Designer_7	DATE @Designer_8

Fermi National Accelerator Laboratory
United States Department of Energy

C:\cdms_stm\stm\CDMS_STM_V2a\CDMS_STM_V2a.prj

CDMS System Test Module (CDMS-STM)
Phonon Pulse Generator Schematic

SIZE	DRAWING NUMBER		REV
F	@Designer_9	Schematic Page 01 of 01	10

M=BND; V=6LA