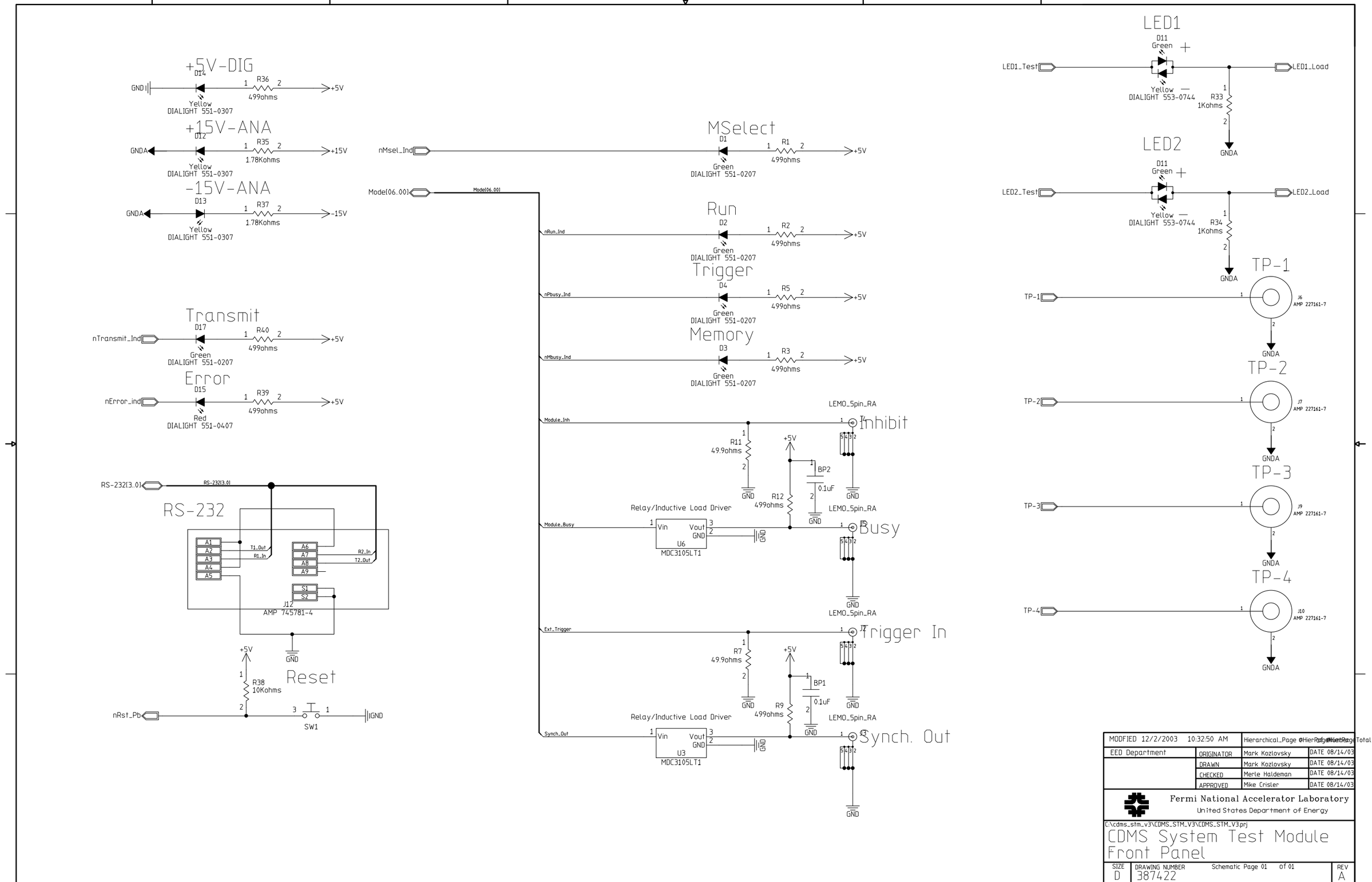

MODIFIED 12/2/2003 10:32:50 AM		Hierarchical_Page 01 Hierarchical Page Total	
EED Department	ORIGINATOR	Mark Kozlovsky	DATE 08/14/03
	DRAWN	Mark Kozlovsky	DATE 08/14/03
	CHECKED	Merle Haldeman	DATE 08/14/03
	APPROVED	Mike Crisler	DATE 08/14/03

Fermi National Accelerator Laboratory
United States Department of Energy

C:\cdms_stm_v3\CDMS_STM_V3\CDMS_STM_V3.prj

CDMS System Test Module Front Panel

SIZE	DRAWING NUMBER		REV
D	387422	Schematic Page 01 of 01	A

H=8ND; V=4LA