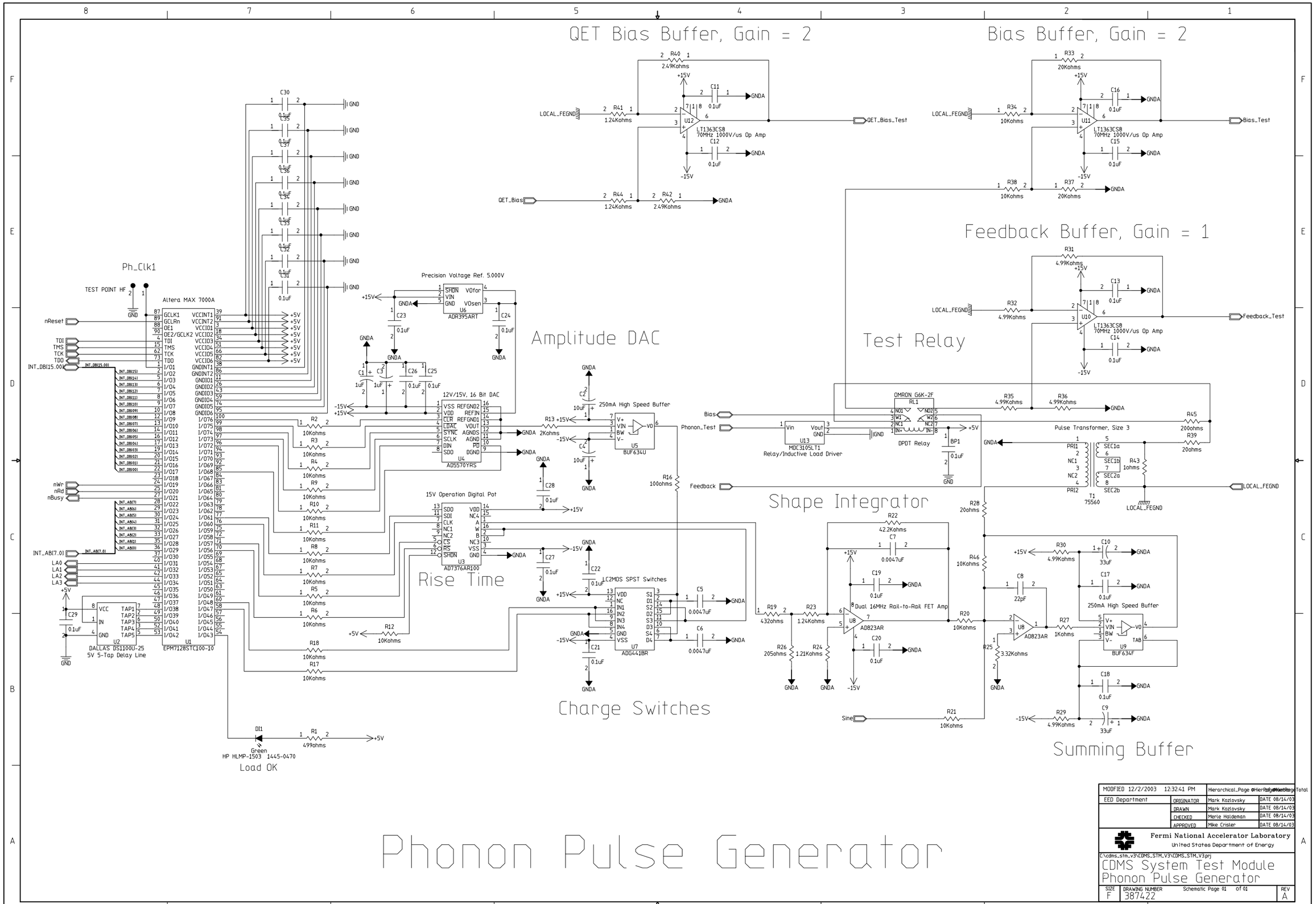
QET Bias Buffer, Gain = 2
Bias Buffer, Gain = 2
Feedback Buffer, Gain = 1
Amplitude DAC
Test Relay
Shape Integrator
Rise Time
Charge Switches
Summing Buffer
Load OK
Phonon Pulse Generator
Ph_Clk1
Altera MAX 7000A
Precision Voltage Ref. 5.000V
12V/15V, 16 Bit DAC
250mA High Speed Buffer
15V Operation Digital Pot
LC2MOS SPST Switches
Dual 16MHz Rail-to-Rail FET Amp
Pulse Transformer, Size 3
DPDT Relay
Relay/Inductive Load Driver
5V 5-Tap Delay Line
LT1363CS8
70MHz 1000V/us Op Amp
LOCAL_FEGND
QET_Bias_Test
Bias_Test
Feedback_Test
Bias
Phonon_Test
Feedback
Sine
MODIFIED 12/2/2003 12:32:41 PM
EED Department
ORIGINATOR Mark Kozlovsky DATE 08/14/03
DRAWN Mark Kozlovsky DATE 08/14/03
CHECKED Merle Haldeman DATE 08/14/03
APPROVED Mike Crisler DATE 08/14/03
Fermi National Accelerator Laboratory
United States Department of Energy
C:\cdms_stm_v3\CDMS_STM_V3\CDMS_STM_V3.prj
CDMS System Test Module
Phonon Pulse Generator
SIZE F
DRAWING NUMBER 387422
Schematic Page 01 of 01
REV A