Relay Drivers

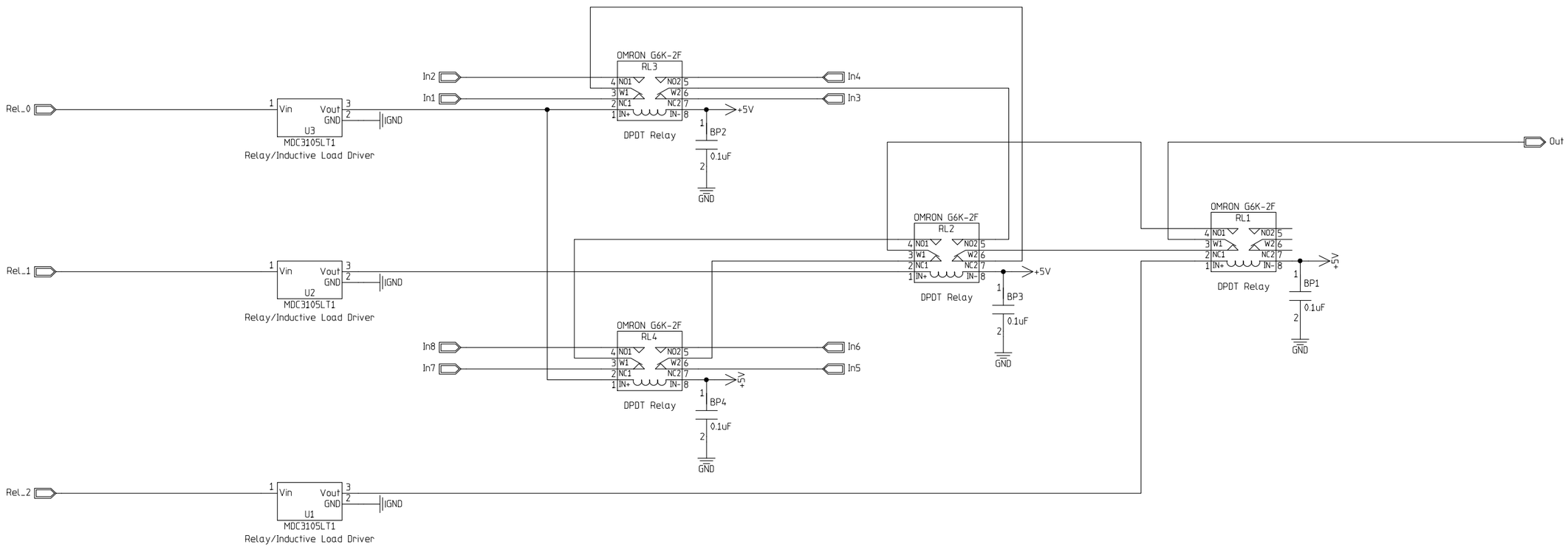

Signal MUX Truth Table

Rel_2	Rel_1	Rel_0	Out
0	0	0	In1
0	0	1	In2
0	1	0	In3
0	1	1	In4
1	0	0	In5
1	0	1	In6
1	1	0	In7
1	1	1	In8

MODFIED 11/26/2003 3:29:20 PM		Hierarchical_Page @Hierarchical_Page Total	
EED Department	ORIGINATOR	Mark Kozlovsky	DATE 08/14/03
	DRAWN	Mark Kozlovsky	DATE 08/14/03
	CHECKED	Merle Haldeman	DATE 08/14/03
	APPROVED	Mike Crisler	DATE 08/14/03

Fermi National Accelerator Laboratory
United States Department of Energy

C:\cdms_stm_v3\CDMS_STM_V3\CDMS_STM_V3.prj

CDMS System Test Module
Signal Multiplexor

SIZE	DRAWING NUMBER	Schematic Page 01 of 01	REV
D	387422		A

H=8ND; V=4LA