POWER ON SEQUENCER CONTINUED

REVISIONS			
REV	DESCRIPTION	DATE	APPROVED

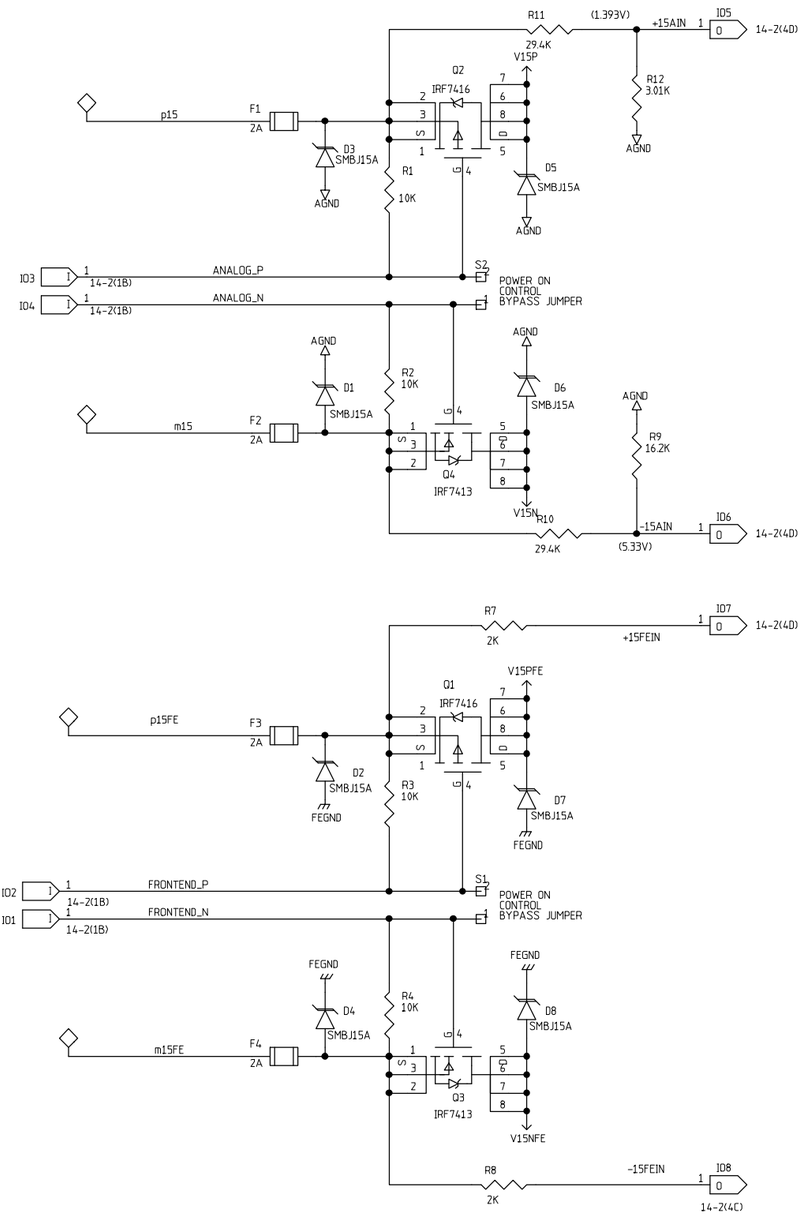

	NAME	DATE
ORIGINATOR	MERLE HALDEMAN	11/18/98
DRAWN	BRUCE MERKEL	11/18/98
CHECKED	TOM CRENNA	1/8/99
APPROVED		

FERMILAB PPD/ETT/ES CDMS (E-891)
ZIP MODULE
15 VOLT SECTION

SIZE	FSCM NO.	DWG. NO.	REV
C			1
SCALE		SHEET 14-3	