POWER ON SEQUENCER

REVISIONS			
REV	DESCRIPTION	DATE	APPROVED

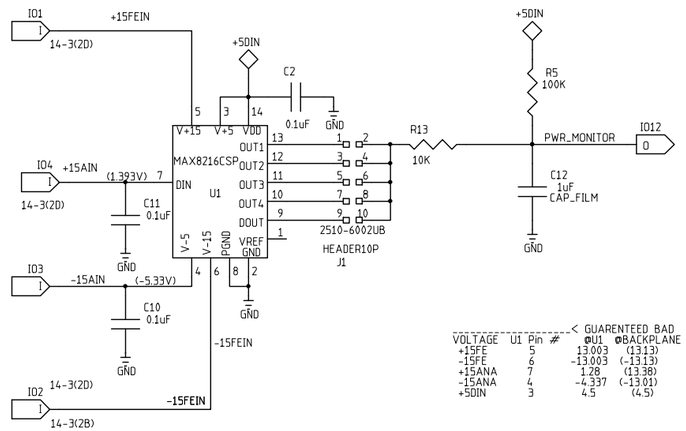

VOLTAGE	U1 Pin #	< GUARENTEED BAD ⊕U1	⊕BACKPLANE	> GUARENTEED GOOD ⊕U1	⊕BACKPLANE	EXPECTED ⊕U1	MEASURED ⊕BACKPLANE
+15FE	5	13.003	(13.13)	13.467	(13.6)	14.82	(15)
-15FE	6	-13.003	(-13.13)	-13.467	(-13.6)	-14.82	(-15)
+15ANA	7	1.28	(13.38)	1.262	(13.87)	1.37	(15)
-15ANA	4	-4.337	(-13.01)	-4.493	(-13.47)	-5.002	(-15)
+5DIN	3	4.5	(4.5)	4.657	(4.657)	5.0	(5.0)

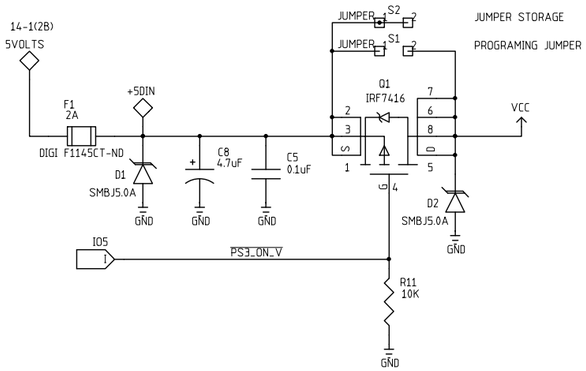

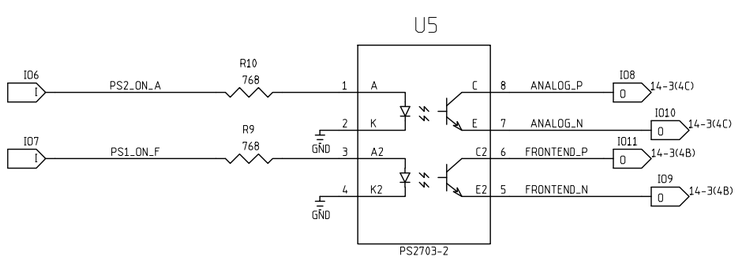

	NAME	DATE
ORIGINATOR	MERLE HALDEMAN	11/18/98
DRAWN	BRUCE MERKEL	11/18/98
CHECKED	TOM CRENNA	1/8/99
APPROVED		

FERMILAB PPD/ETT/ES CDMS (E-891)
ZIP MODULE
5 VOLT SECTION

SIZE	FSCM NO.	DWG. NO.	REV
C			1
SCALE		SHEET 14-2	