DAC 10 VOLT REGULATOR

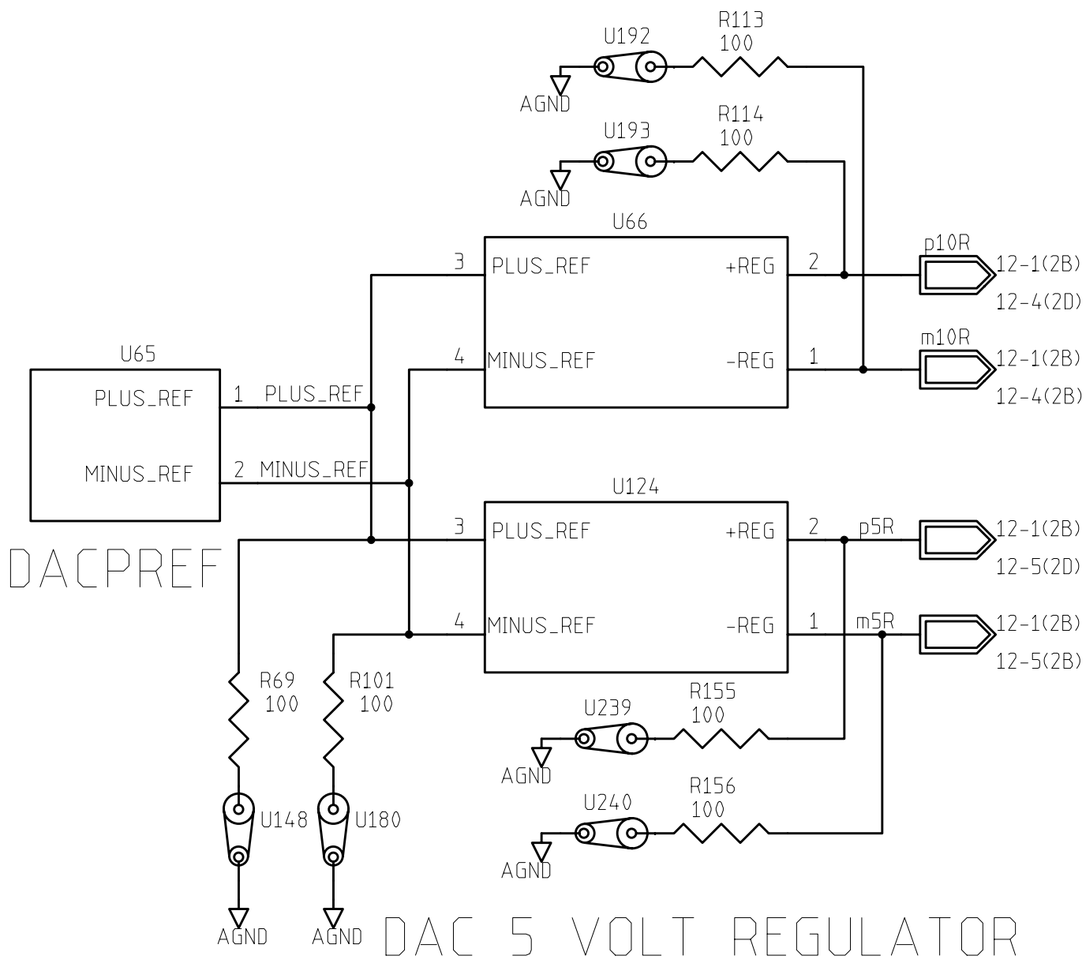

REVISIONS			
REV	DESCRIPTION	DATE	APPROVED
0	UNDER DEVELOPMENT	1-19-99	

1: ALL RESISTORS ARE 1% UNLESS OTHERWISE STATED
2: ALL LOGIC LEVELS ARE HIGH TRUE

	NAME	DATE
ORIGINATOR	MERLE HALDEMAN	11/16/98
DRAWN	BRUCE MERKEL	11/16/98
CHECKED	TOM CRENNA	1/8/99
APPROVED		

FERMILAB PPD/ ETT/ ES CDMS(E-891)
ZIP MODULE
DAC REFERENCES

SIZE	FSCM NO.	DWG. NO.	REV
A			
SCALE		SHEET 12-2	