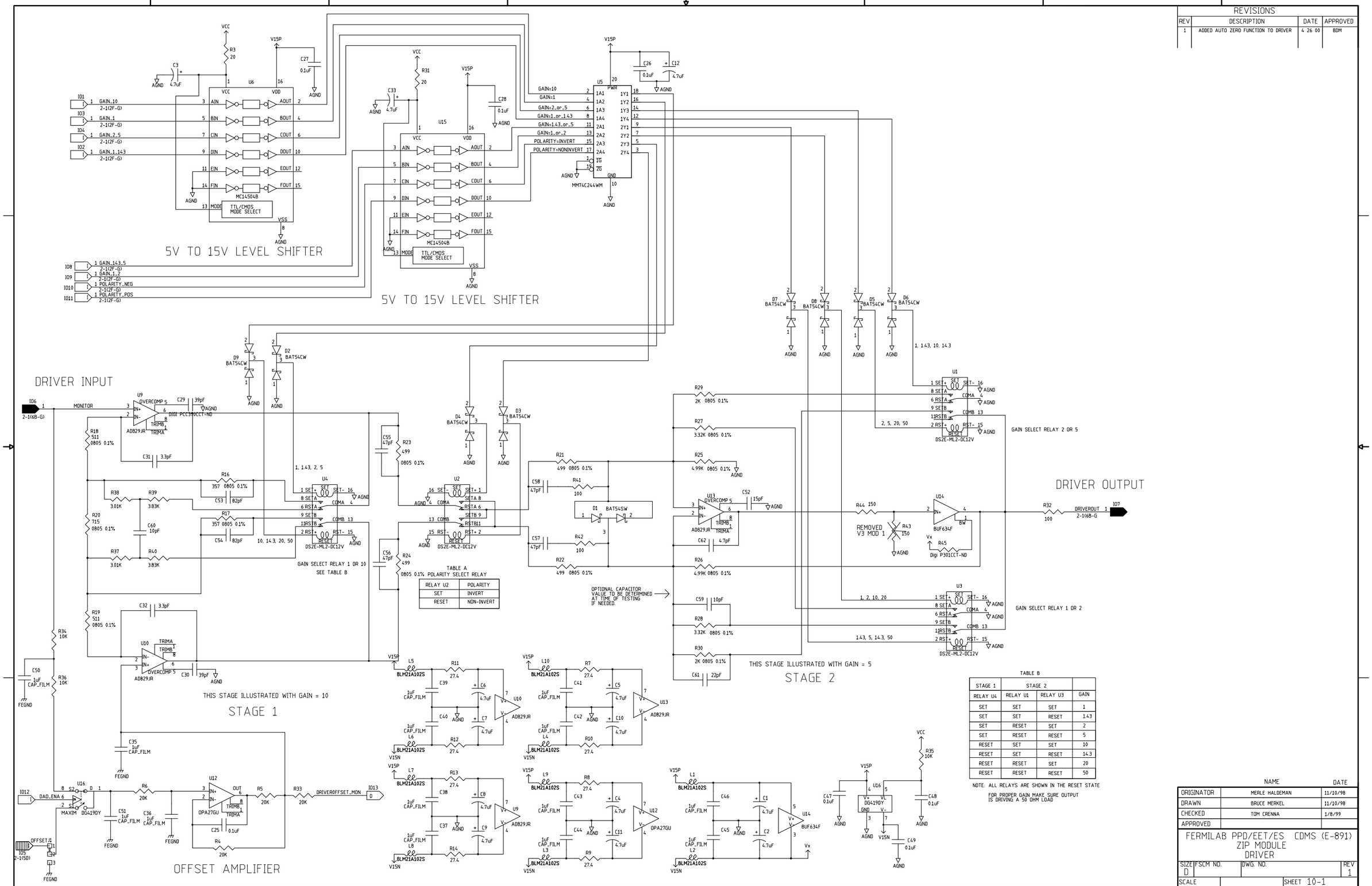

TABLE A POLARITY SELECT RELAY

RELAY U2	POLARITY
SET	INVERT
RESET	NON-INVERT

TABLE B

STAGE 1	STAGE 2		
RELAY U4	RELAY U1	RELAY U3	GAIN
SET	SET	SET	1
SET	SET	RESET	1.43
SET	RESET	SET	2
SET	RESET	RESET	5
RESET	SET	SET	10
RESET	SET	RESET	14.3
RESET	RESET	SET	20
RESET	RESET	RESET	50

NOTE: ALL RELAYS ARE SHOWN IN THE RESET STATE

FOR PROPER GAIN MAKE SURE OUTPUT IS DRIVING A 50 OHM LOAD

REVISIONS

REV	DESCRIPTION	DATE	APPROVED
1	ADDED AUTO ZERO FUNCTION TO DRIVER	4 26 00	BDM

	NAME	DATE
ORIGINATOR	MERLE HALDEMAN	11/10/98
DRAWN	BRUCE MERKEL	11/10/98
CHECKED	TOM CRENNA	1/8/99
APPROVED		

FERMILAB PPD/EET/ES CDMS (E-891)
ZIP MODULE
DRIVER

SIZE D | FSCM NO. | DWG. NO. | REV 1

SCALE | SHEET 10-1