FET_HEATER

REVISIONS			
REV	DESCRIPTION	DATE	APPROVED
1	SCHEMATIC UPDATED FOR VERSION 1	10/18/99	BDM

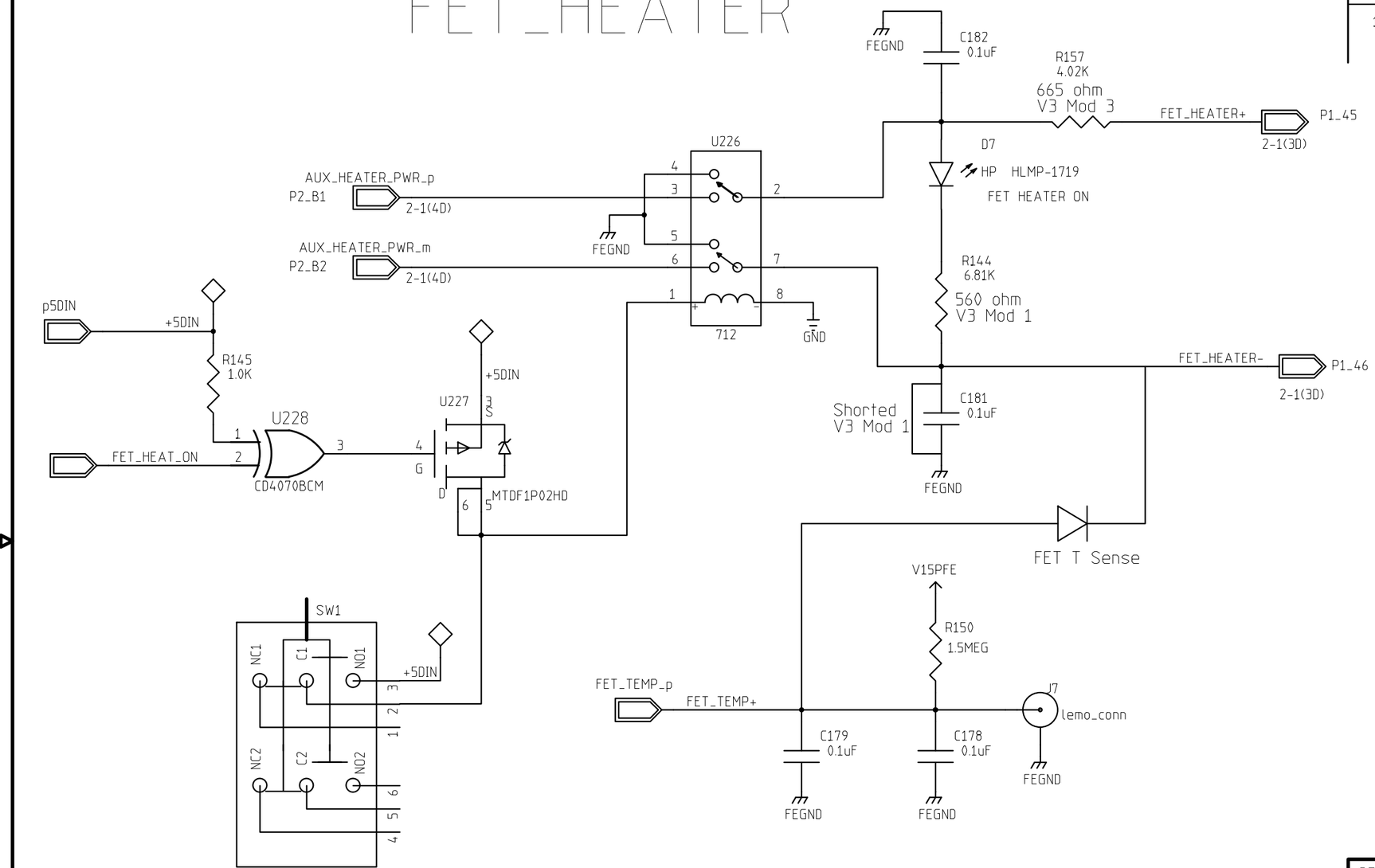

MONENTARY PUSH BUTTON
FRONT PANEL MOUNT SWITCH

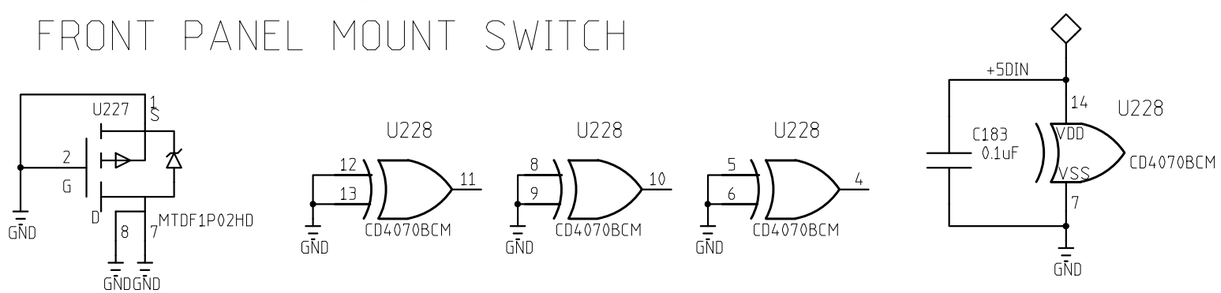

1: ALL RESISTORS ARE 1% UNLESS OTHERWISE STATED
2: ALL LOGIC LEVELS ARE HIGH TRUE

	NAME	DATE
ORIGINATOR	MERLE HALDEMAN	9/23/99
DRAWN	BRUCE MERKEL	9/23/99
CHECKED		
APPROVED		

FERMILAB PPD/EET/ES CDMS (E-891)
ZIP MODULE
FET_HEATER

SIZE	FSCM NO.	DWG. NO.	REV
B			1
SCALE		SHEET 9-1	