P4
(96 PIN CONNECTOR)

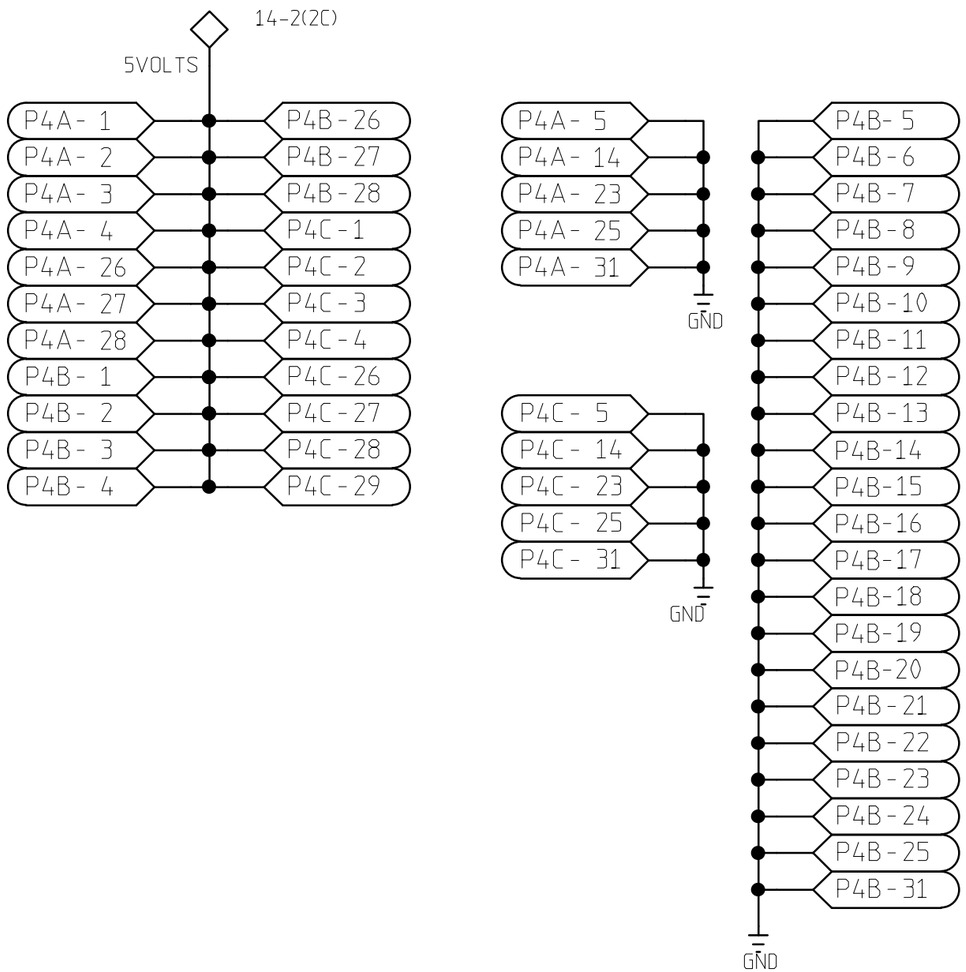

REVISIONS

REV	DESCRIPTION	DATE	APPROVED
0	NAME CHANGED TO MATCH BACKPLANE	7/27/99	BDM

	NAME	DATE
ORIGINATOR	MERLE HALDEMAN	10/8/98
DRAWN	BRUCE MERKEL	10/8/98
CHECKED	TOM CRENNA	1/8/99
APPROVED		

FERMILAB PPD/ETT/ES CDMS (E-891)
ZIP MODULE
P4 BACKPLANE POWER CONNECTION

SIZE	FSCM NO.	DWG. NO.	REV
A			

SCALE | SHEET 1-3