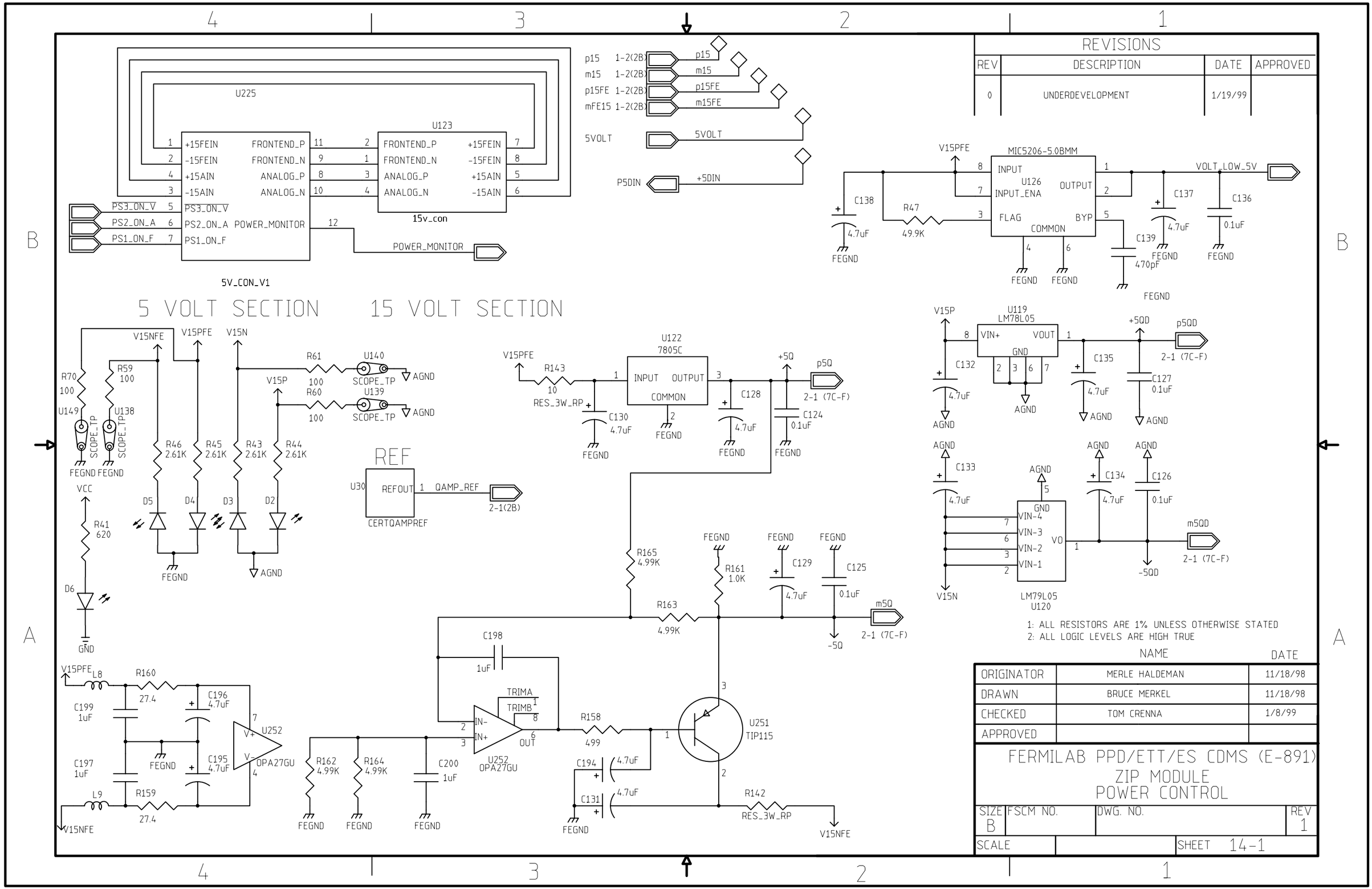

1: ALL RESISTORS ARE 1% UNLESS OTHERWISE STATED
2: ALL LOGIC LEVELS ARE HIGH TRUE

REVISIONS			
REV	DESCRIPTION	DATE	APPROVED
0	UNDERDEVELOPMENT	1/19/99	

	NAME	DATE
ORIGINATOR	MERLE HALDEMAN	11/18/98
DRAWN	BRUCE MERKEL	11/18/98
CHECKED	TOM CRENNA	1/8/99
APPROVED		

FERMILAB PPD/ETT/ES CDMS (E-891)
ZIP MODULE
POWER CONTROL

SIZE	FSCM NO.	DWG. NO.	REV
B			1
SCALE		SHEET 14-1	