DISCRETE Q_AMPLIFIER

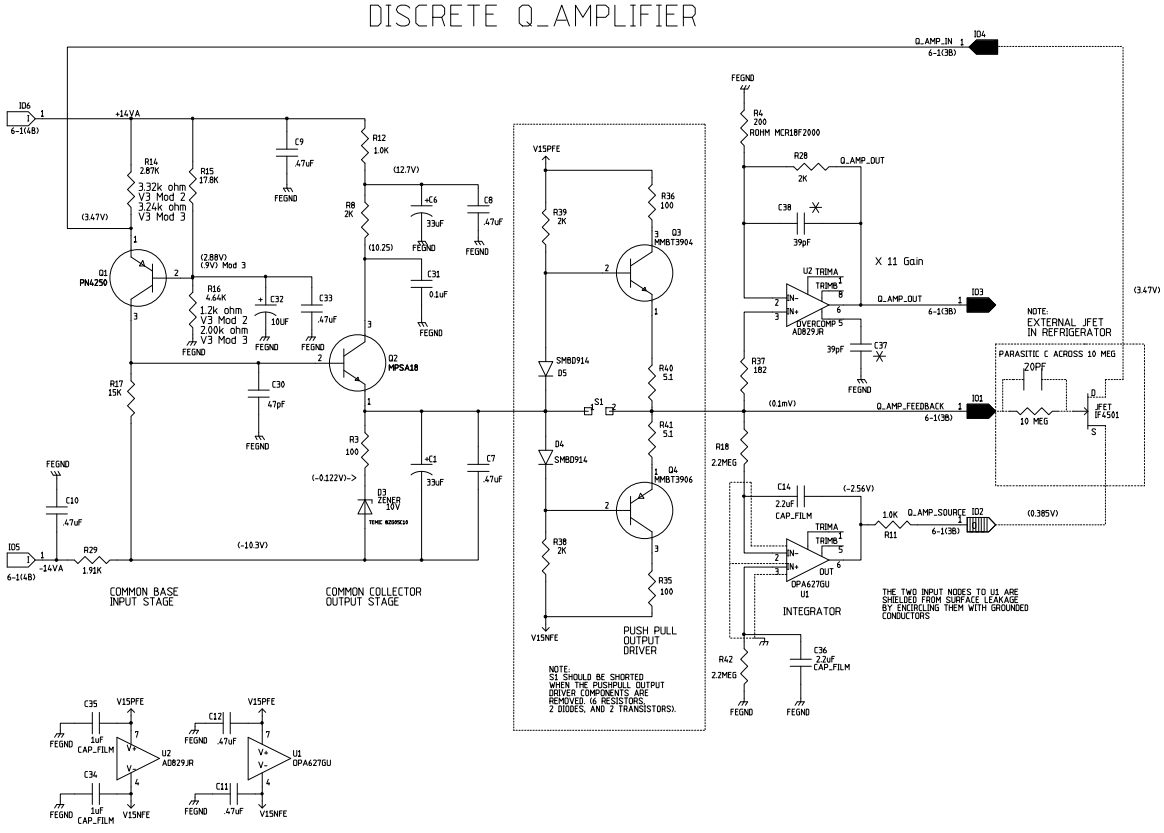

REVISIONS

REV	DESCRIPTION	DATE	APPROVED
1	GENERAL MODIFICATIONS	9/27/99	B.MERKEL
2	REPLACED U2 MOD U1 REPLACE C30	11/13/00	B MERKEL

	NAME	DATE
ORIGINATOR	MERLE HALDEMAN	11/16/98
DRAWN	BRUCE MERKEL	11/16/98
CHECKED	TOM CRENNA	1/6/99
APPROVED		

FERMILAB PPD/EET/ES CDMS (E-891)
ZIP MODULE
DISCRETE Q AMPLIFIER

SIZE	FSCM NO.	DWG. NO.	REV
C			2
SCALE		SHEET 6-2	