REVISIONS			
REV	DESCRIPTION	DATE	APPROVED

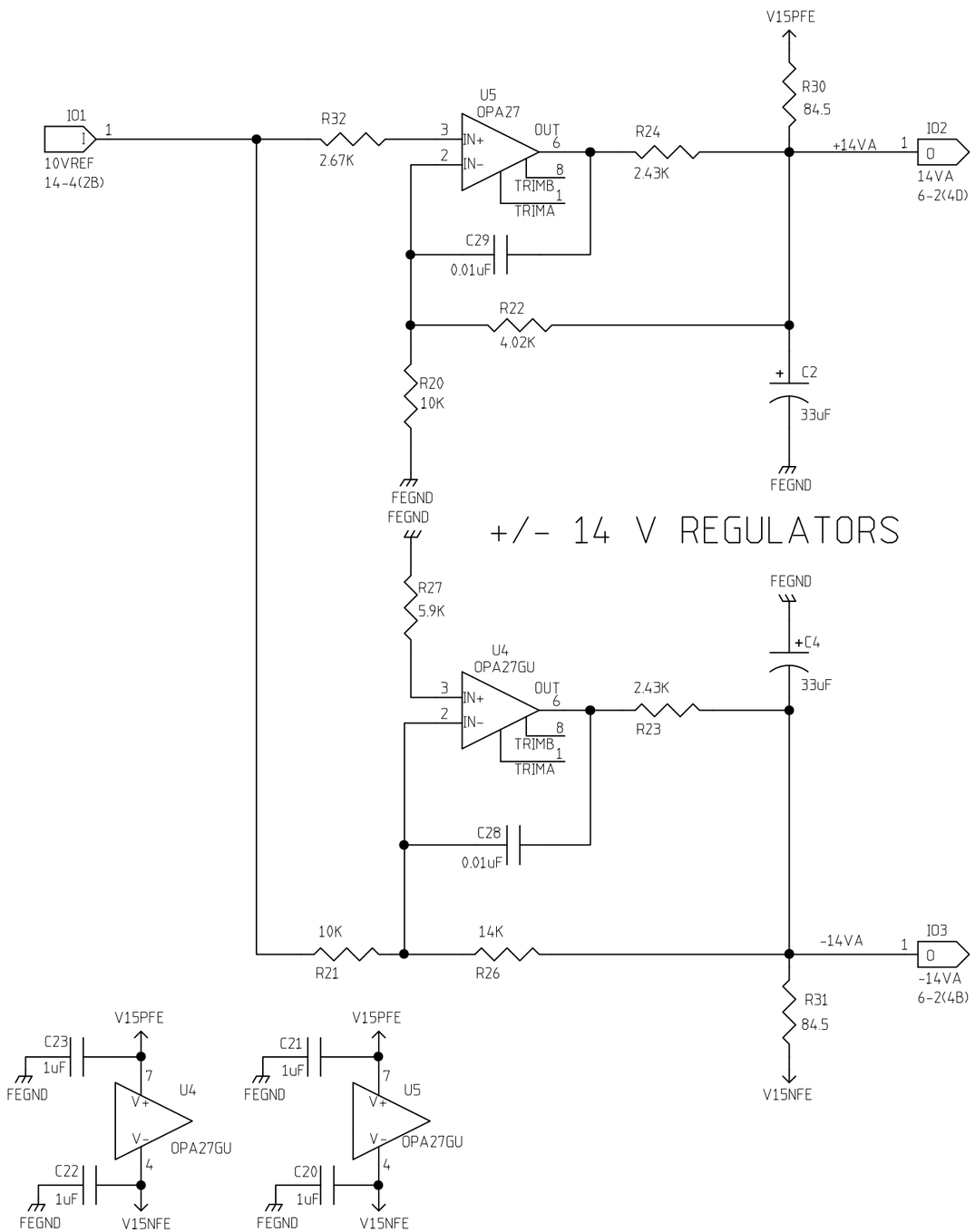

	NAME	DATE
ORIGINATOR	MERLE HALDEMAN	11/16/98
DRAWN	BRUCE MERKEL	11/16/98
CHECKED	TOM CRENNA	1/6/99
APPROVED		

FERMILAB PPD/ ETT/ ES CDMS (E-891)

ZIP MODULE

Q AMP 14V

SIZE	FSCM NO.	DWG. NO.	REV
B			
SCALE		SHEET 6-3	

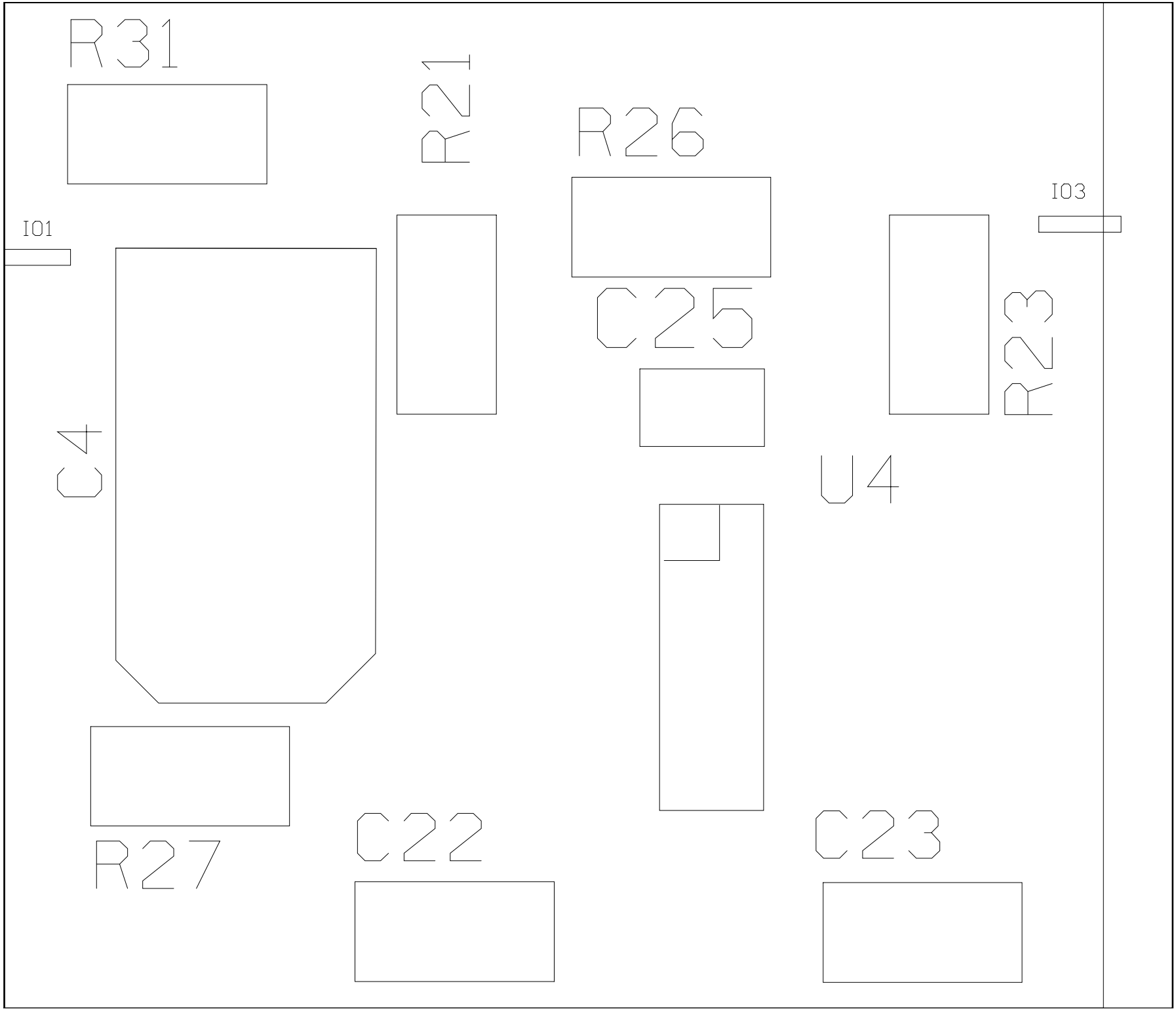
R31
R21
R26
IO3
IO1
C25
R23
C4
U4
R27
C22
C23

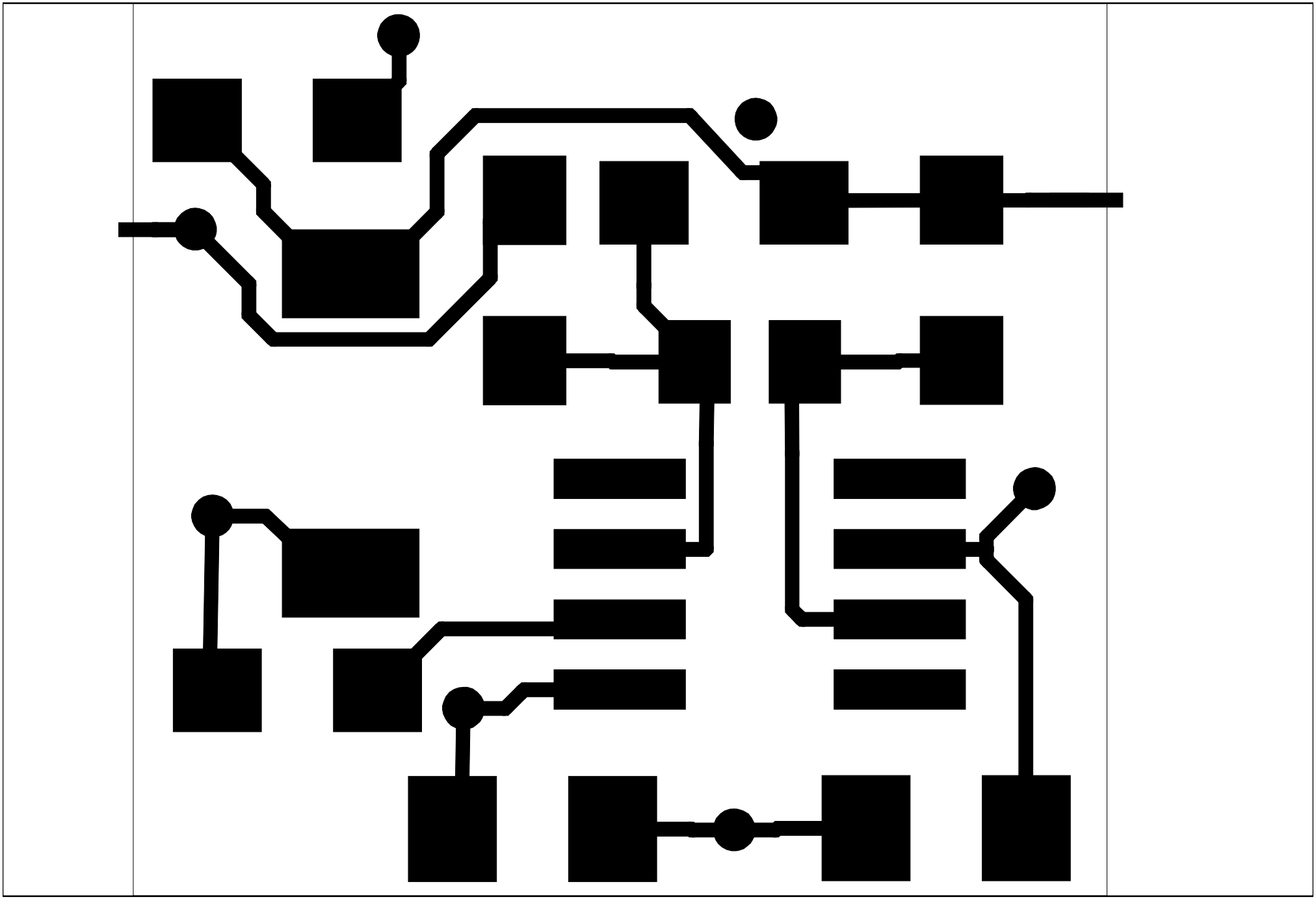

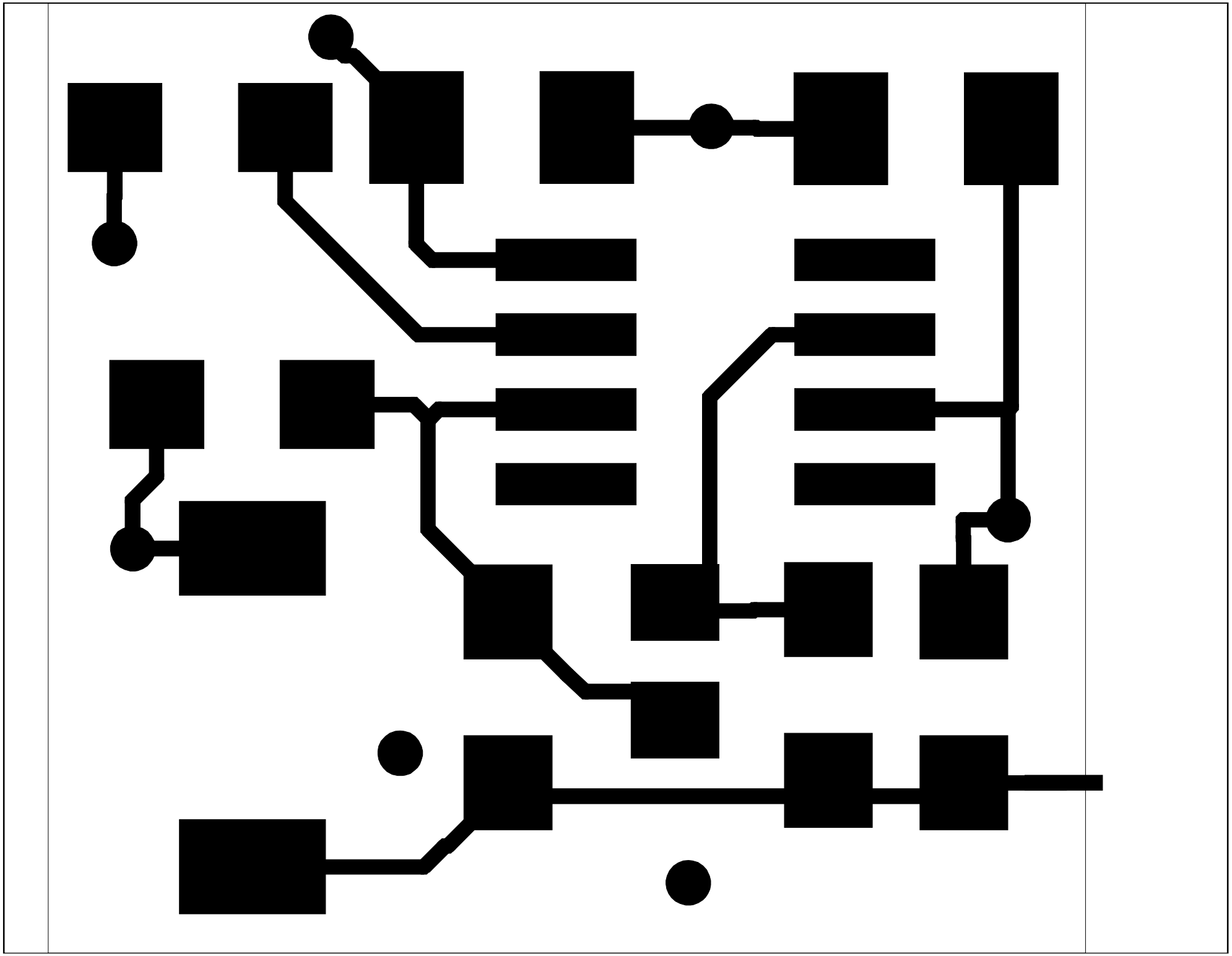

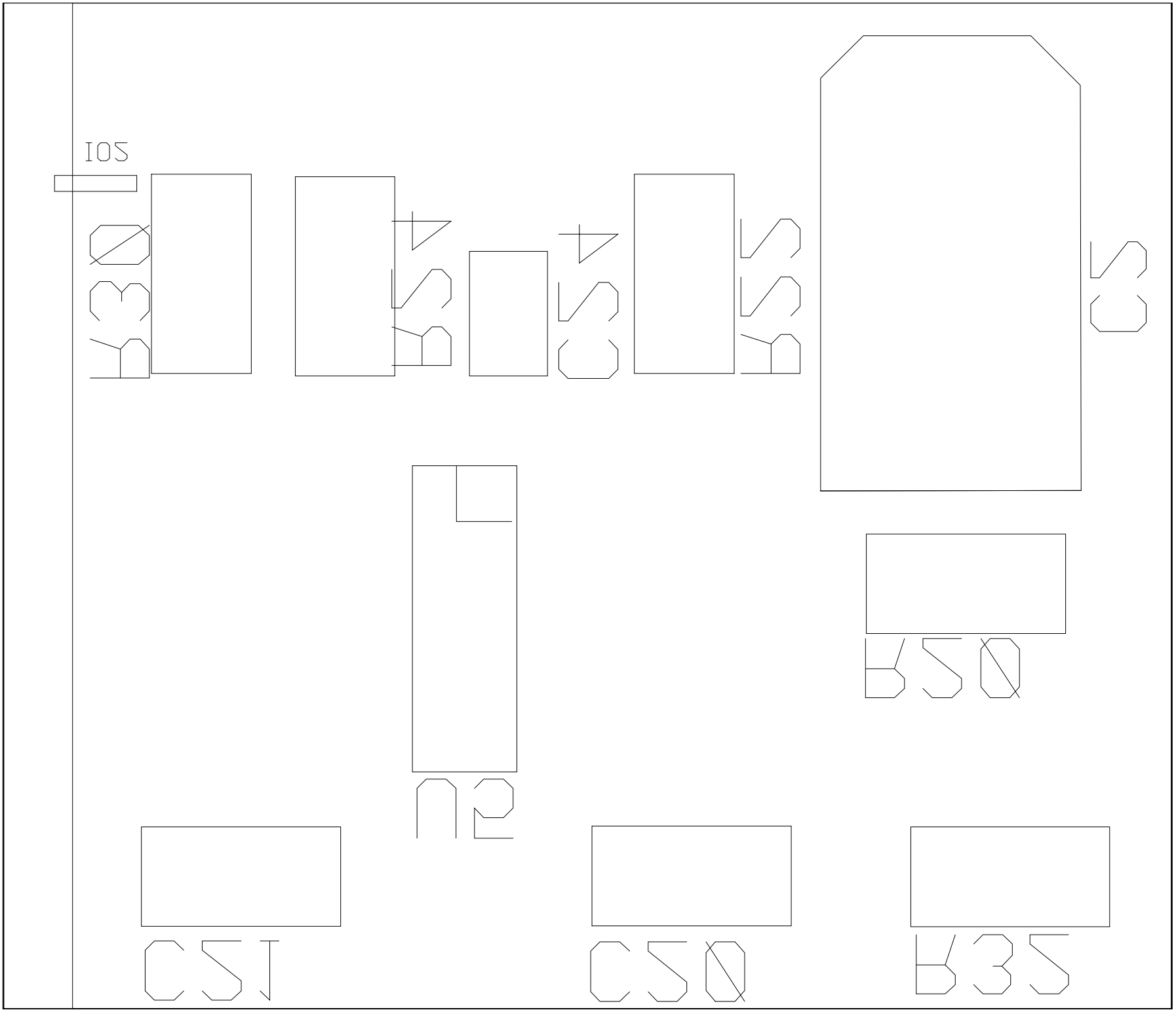
IO5
R30
R24
C24
R25
C5
R50
C51
C50
R35