REVISIONS			
REV	DESCRIPTION	DATE	APPROVED

10 VOLT REFERENCE

10 VOLT BUFFER & NOISE FILTER

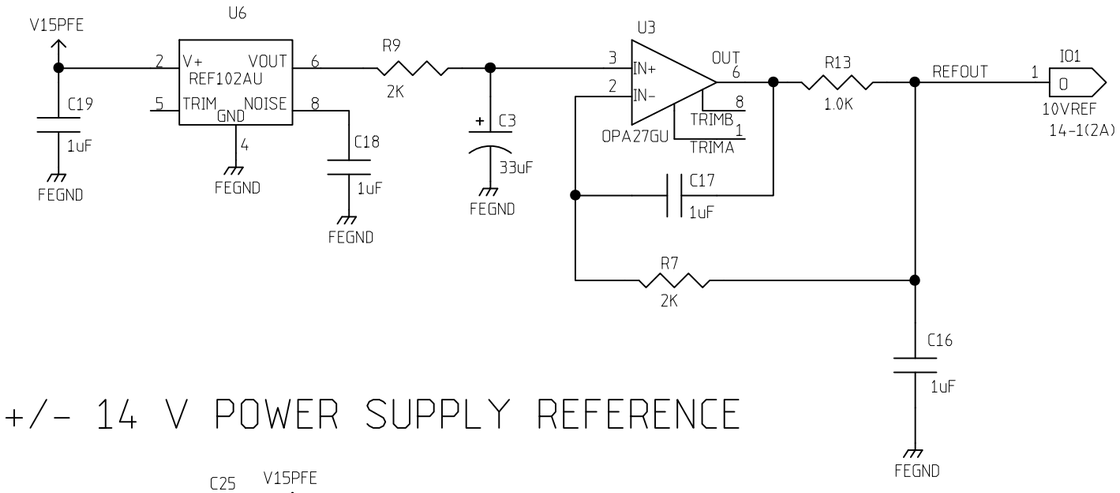

+/- 14 V POWER SUPPLY REFERENCE

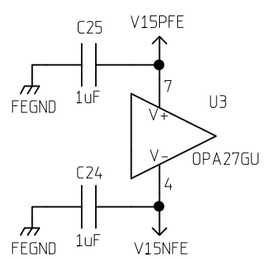

	NAME	DATE
ORIGINATOR	MERLE HALDEMAN	11/18/98
DRAWN	BRUCE MERKEL	11/18/98
CHECKED	TOM CRENNA	1/8/99
APPROVED		

FERMILAB PPD/ETT/ES CDMS (E-891)
ZIP MODULE
Q AMP REFERENCE

SIZE	FSCM NO.	DWG. NO.	REV
B			

SCALE | SHEET 14-4