REVISIONS			
REV	DESCRIPTION	DATE	APPROVED
1	REPLACED 1uF CAPS WITH BACK TO BACK 4.7uF TANT. CAPS	2 29 00	BDM

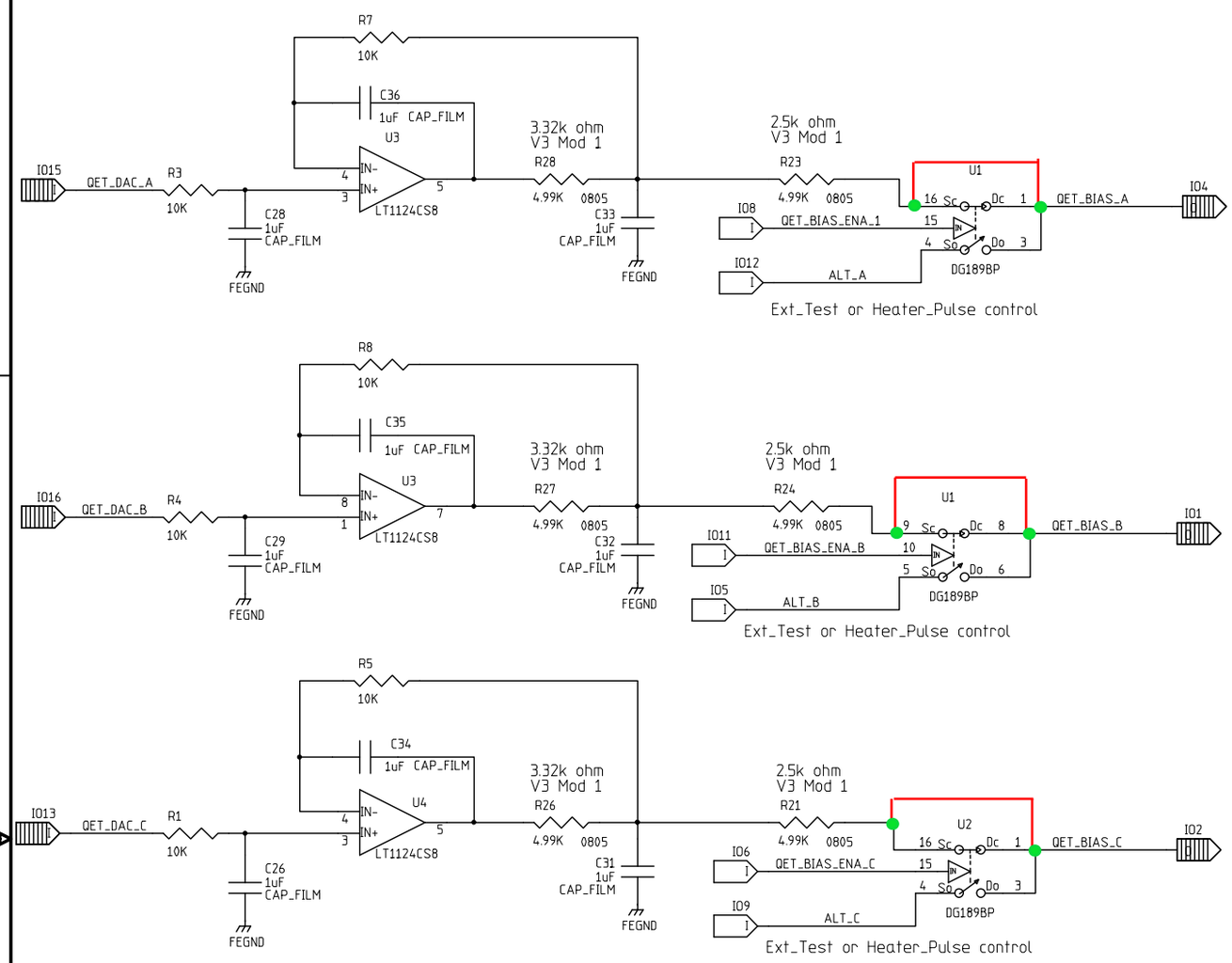

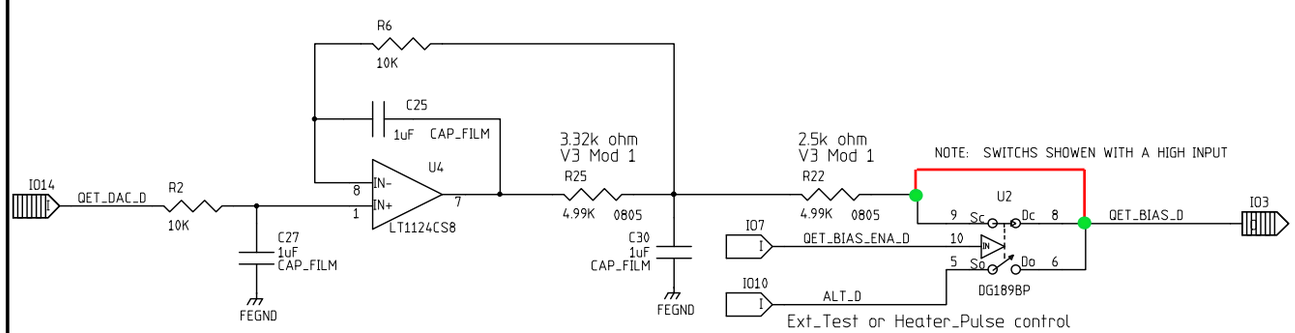

7JUL2006
FEB modification to provide
Dac bias + signal generator

D. Seitz

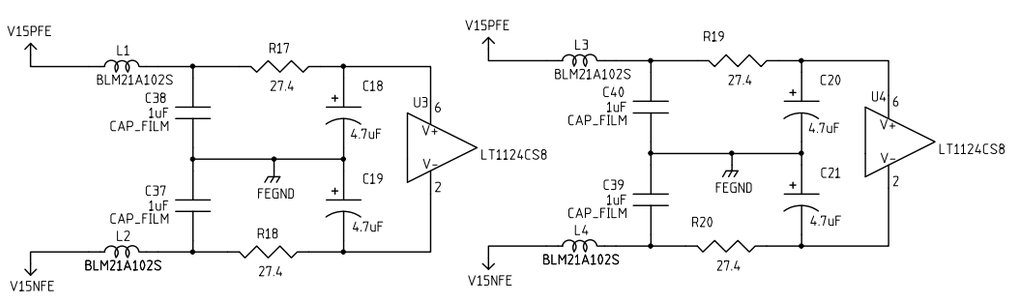

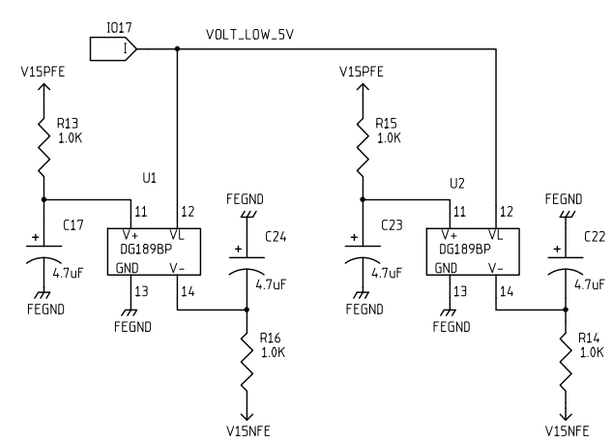

	NAME	DATE
ORIGINATOR	MERLE HALDEMAN	06/17/99
DRAWN	BRUCE MERKEL	07/16/99
CHECKED		
APPROVED		

FERMILAB PPD/ETT/ES CDMS (E-891)
ZIP MODULE
QET BIAS FRONT END

SIZE	FSCM NO.	DWG. NO.	REV
C			1
SCALE		SHEET 5-2	

DWG. NO. SH. REV