REVISIONS			
REV	DESCRIPTION	DATE	APPROVED

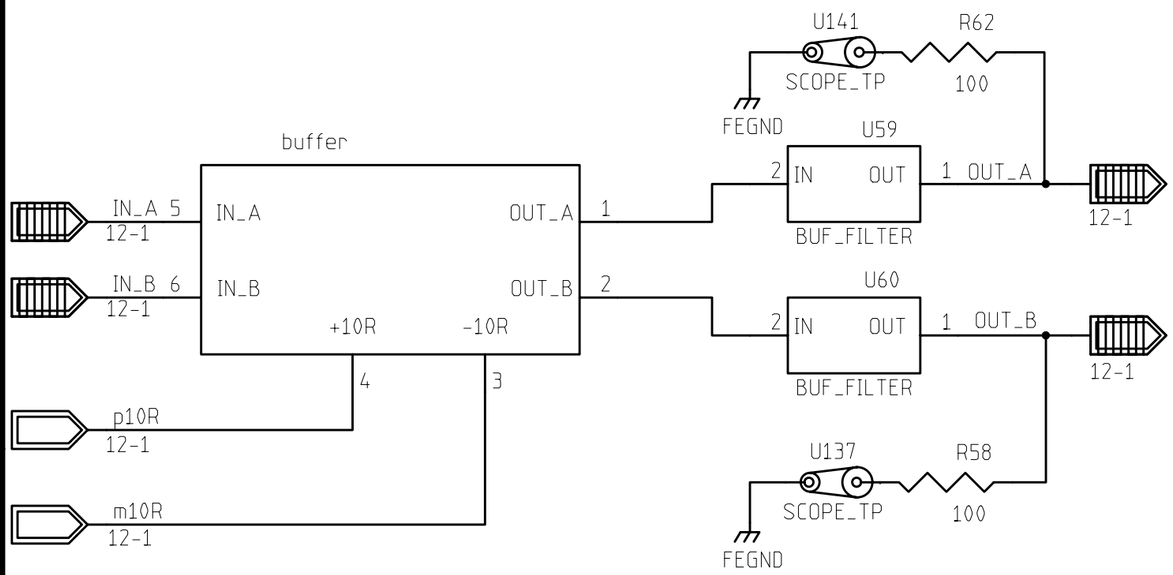

1: ALL RESISTORS ARE 1% UNLESS OTHERWISE STATED
2: ALL LOGIC LEVELS ARE HIGH TRUE

	NAME	DATE
ORIGINATOR	MERLE HALDEMAN	11/17/98
DRAWN	BRUCE MERKEL	12/10/98
CHECKED	TOM CRENNA	1/8/99
APPROVED		

FERMILAB PPD/ETT/ES CDMS (E-891)
ZIP MODULE
DUAL NON_INVERTING BUFFER BLOCK

SIZE	FSCM NO.	DWG. NO.	REV
A			1

SCALE		SHEET 12-7

U43