| REVISIONS | | | |
|---|---|---|---|
| REV | DESCRIPTION | DATE | APPROVED |
| | | | |

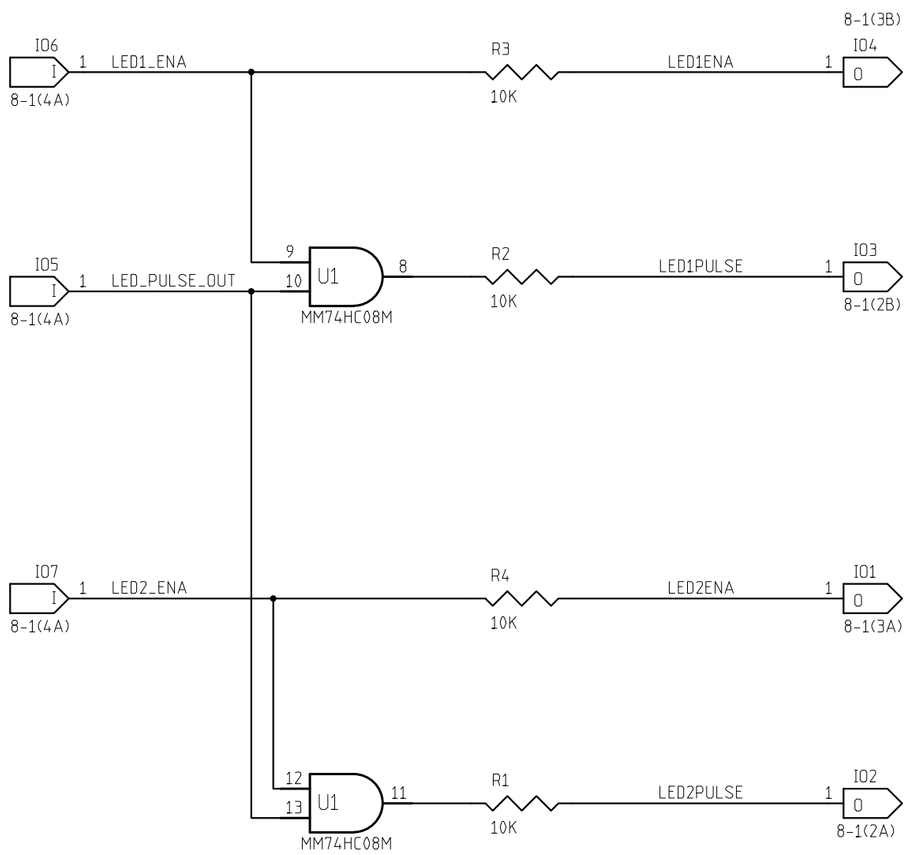


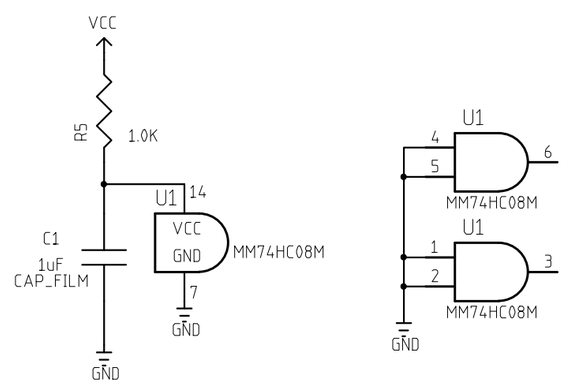


| | NAME | DATE |
|---|---|---|
| ORIGINATOR | MERLE HALDEMAN | 3/24/99 |
| DRAWN | BRUCE MERKEL | 3/24/99 |
| CHECKED | | |
| APPROVED | | |

FERMILAB PPD/ ETT/ ES CDMS(E-891)
ZIP MODULE
LED PULSE CONTROL

| SIZE | FSCM NO. | DWG. NO. | REV |
|---|---|---|---|
| B | | | |

SCALE | SHEET 8-3