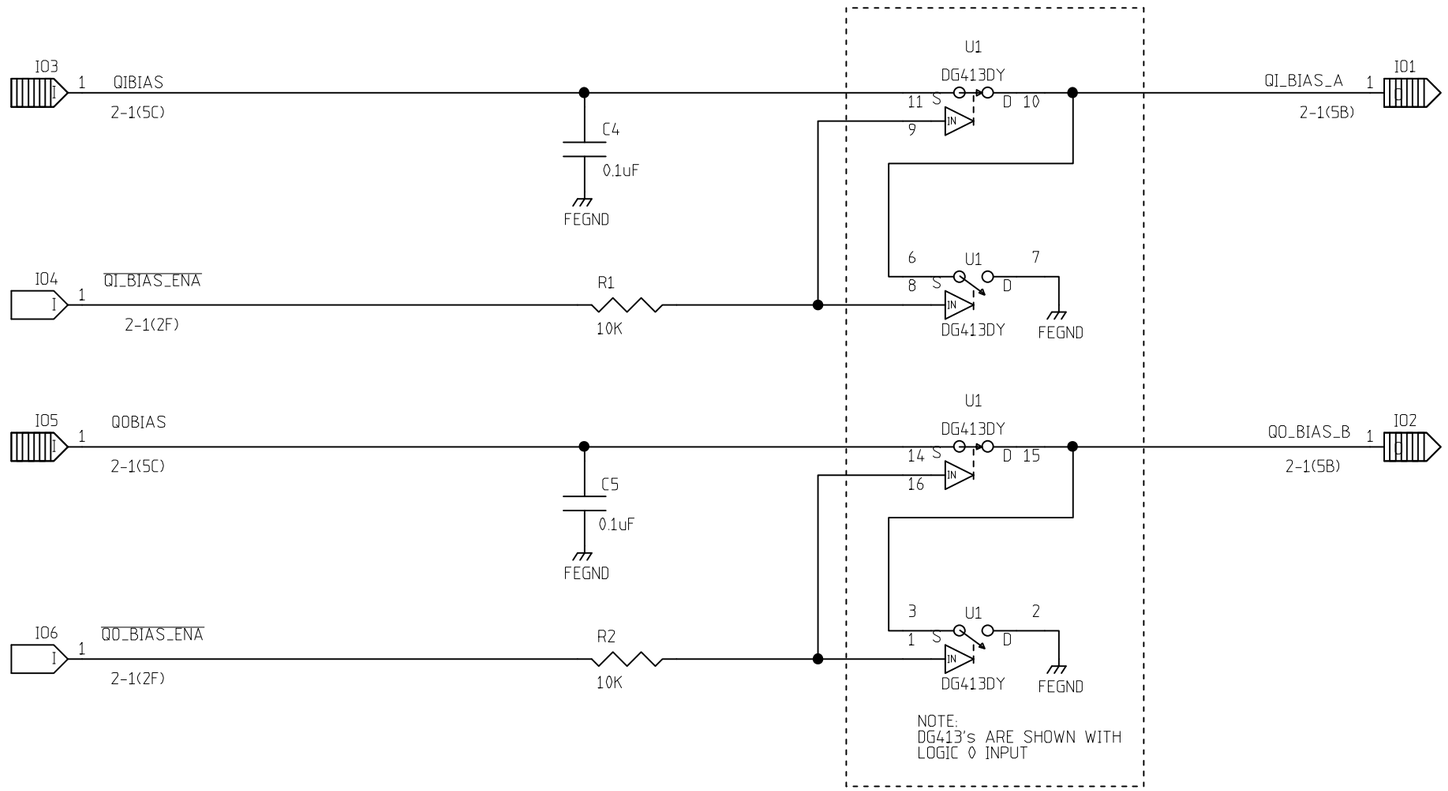

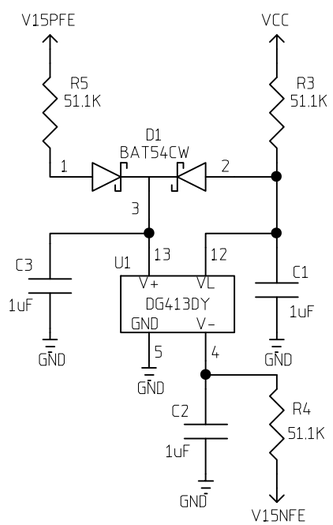

REVISIONS			
REV	DESCRIPTION	DATE	APPROVED

	NAME	DATE
ORIGINATOR	MERLE HALDEMAN	11/16/98
DRAWN	BRUCE MERKEL	12/08/98
CHECKED	TOM CRENNA	1/6/99
APPROVED		

FERMILAB PPD/ETT/ES CDMS (E-891)
ZIP MODULE
QBIAS FRONT END

SIZE	FSCM NO.	DWG. NO.	REV
B			
SCALE		SHEET 7-1	