REVISIONS			
REV	DESCRIPTION	DATE	APPROVED

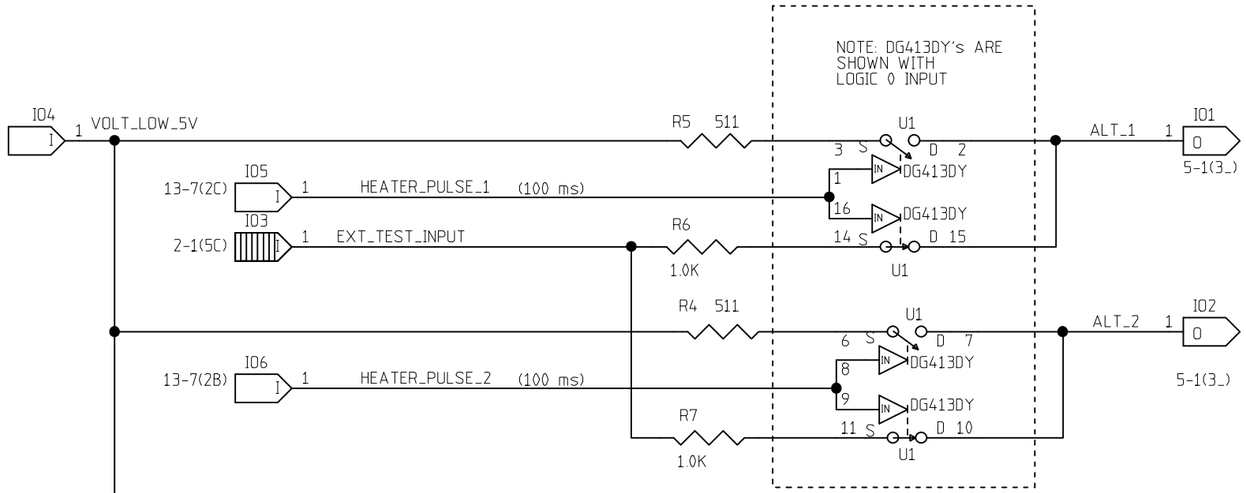

	NAME	DATE
ORIGINATOR	MERLE HALDEMAN	11/16/98
DRAWN	BRUCE MERKEL	07/16/99
CHECKED		
APPROVED		

FERMILAB PPD/ETT/ES CDMS (E-891)
ZIP MODULE
QET_SEL

SIZE	FSCM NO.	DWG. NO.	REV
B			

SCALE | SHEET 5-4