REVISIONS			
REV	DESCRIPTION	DATE	APPROVED
1	UPDATED FOR VERSION 1	9/17/99	

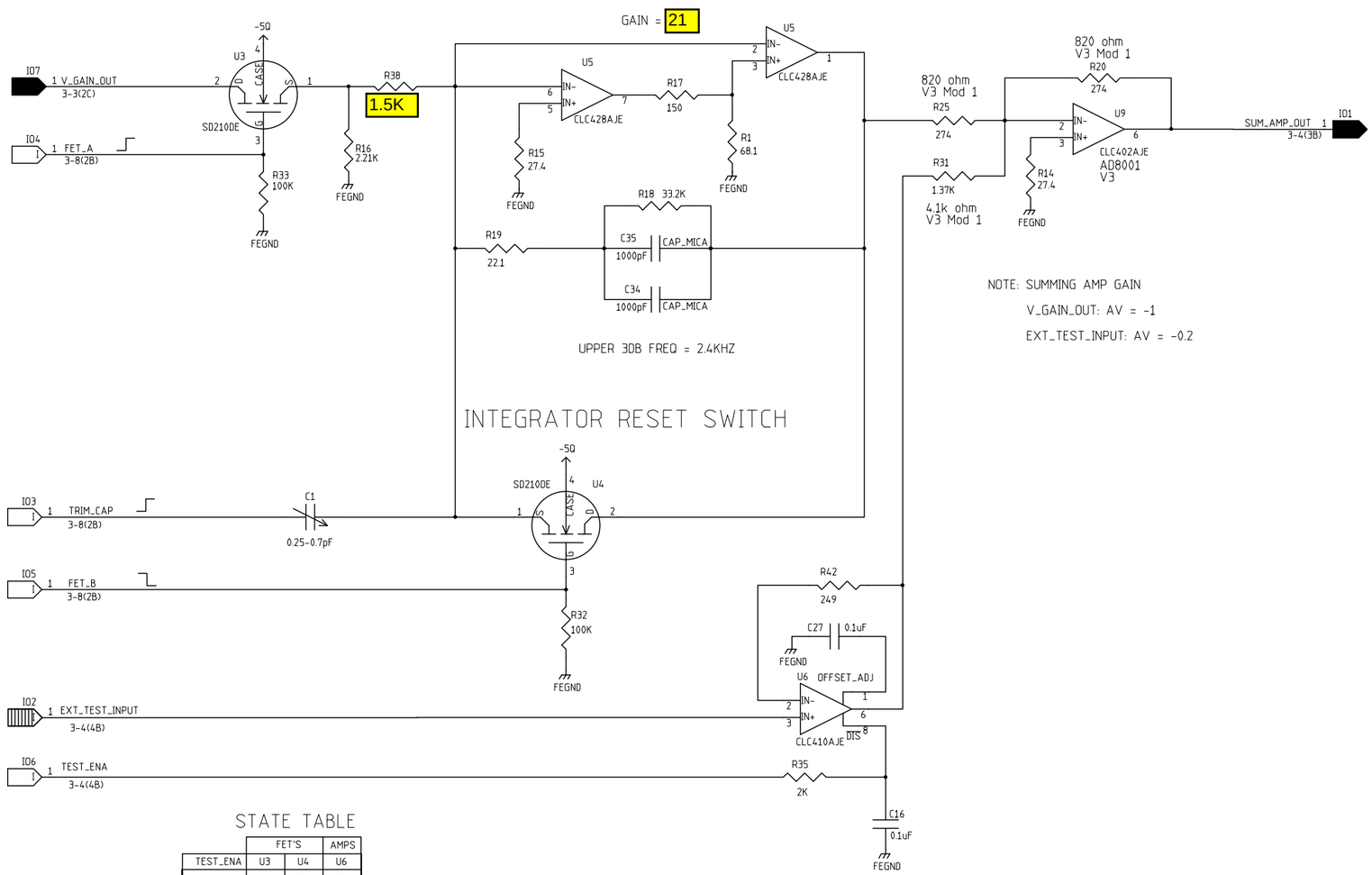

STATE TABLE

	FET'S		AMPS
TEST_ENA	U3	U4	U6
LOW	O	C	E
HI	C	O	D

O = OPEN C = CLOSED
E = ENABLE D = DISABLE

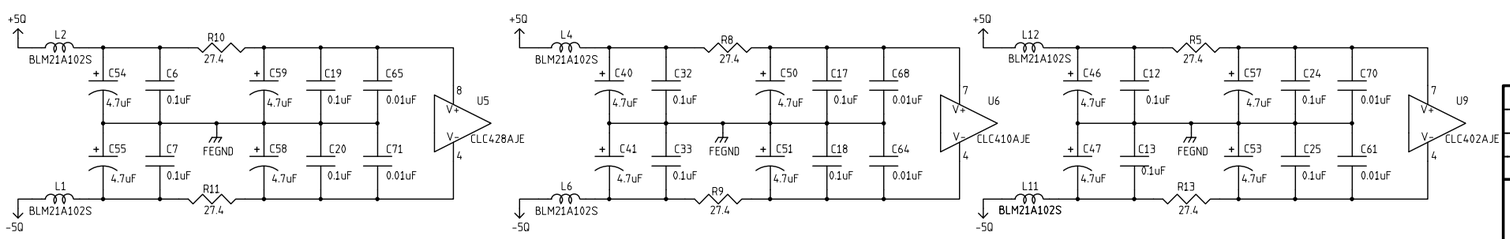

	NAME	DATE
ORIGINATOR	MERLE HALDEMAN	11/13/98
DRAWN	BRUCE MERKEL	11/13/98
CHECKED	TOM CRENNA	1/6/99
APPROVED		

FERMILAB PPD/ETT/ES CDMS (E-891)
ZIP MODULE
SQUID FEEDBACK INTEGRATOR

SIZE	FSCM NO.	DWG. NO.	REV
C			1
SCALE		SHEET 3-5	