MONITOR SELECTION SWITCHES

REVISIONS			
REV	DESCRIPTION	DATE	APPROVED
2	REPLACED OP AMPS WITH ANALOG SWITCH	12/08/2K	

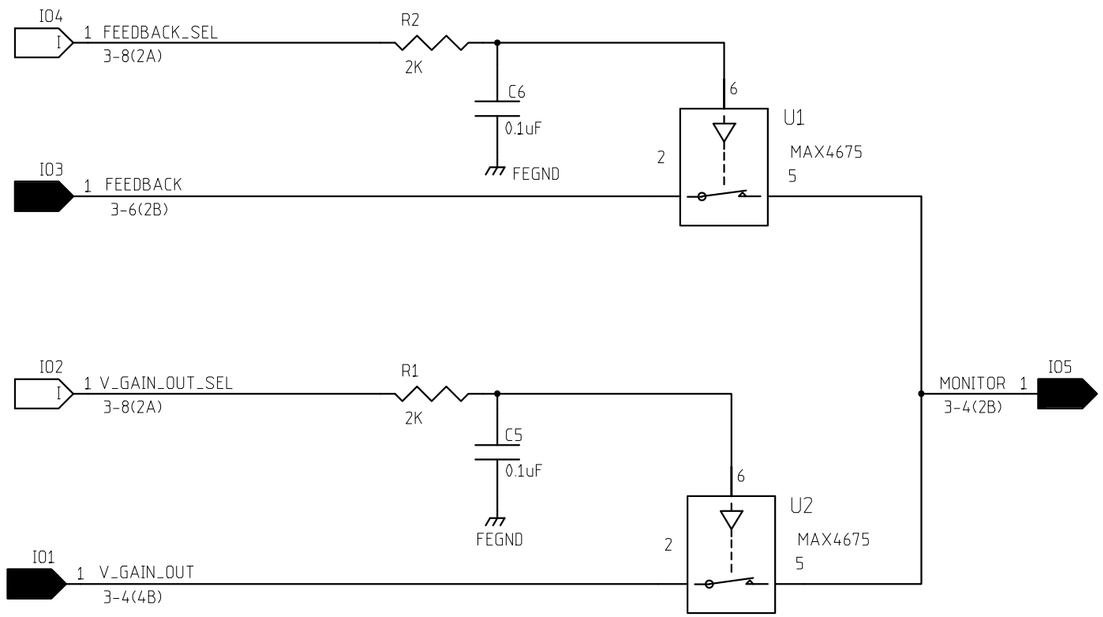

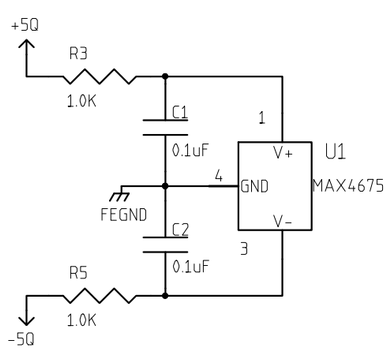

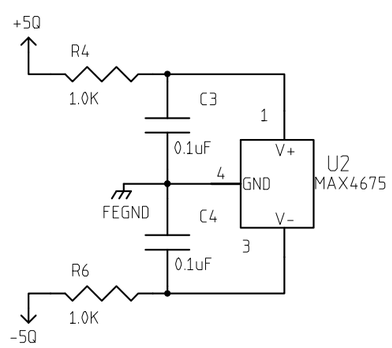

MAX4675	
IN	SWITCH
0	OFF
1	ON

	NAME	DATE
ORIGINATOR	MERLE HALDEMAN	11/13/98
DRAWN	BRUCE MERKEL	11/13/98
CHECKED	TOM CRENNA	1/6/99
APPROVED		

FERMILAB PPD/ETT/ES CDMS (E-891)
ZIP MODULE
SQUID FEEDBACK MONITOR

SIZE	FSCM NO.	DWG. NO.	REV
B			2

SCALE | SHEET 3-7