REVISIONS			
REV	DESCRIPTION	DATE	APPROVED

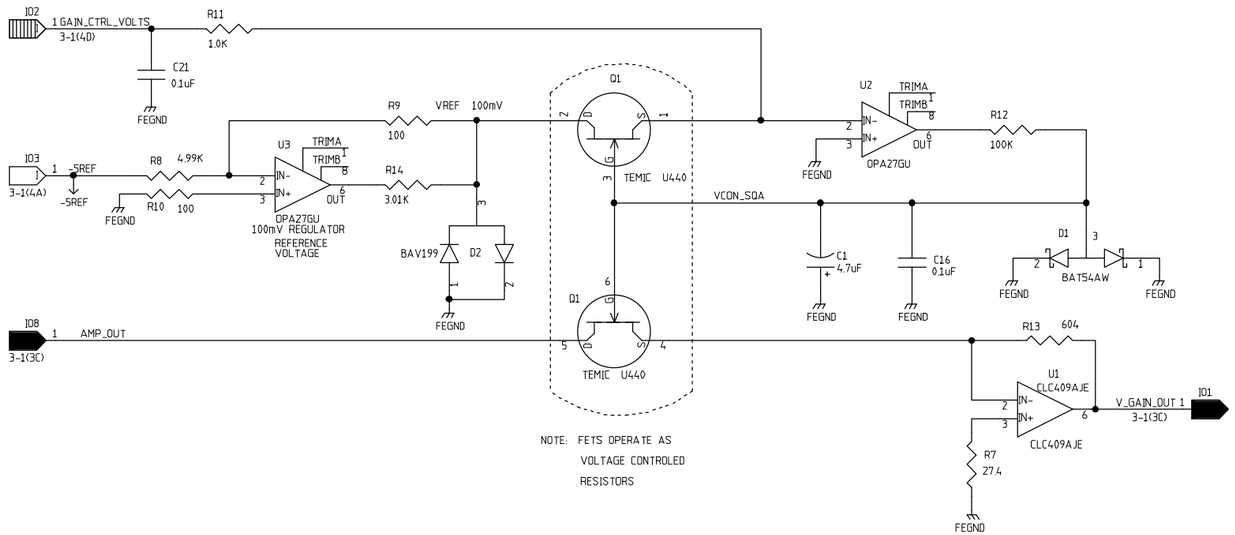

NOTE: FETS OPERATE AS
VOLTAGE CONTROLED
RESISTORS

VARIABLE GAIN AMPLIFIER

$$GAIN = R13 \times \frac{GVC}{100}$$

GCV = GAIN_CONTROL_VOLTAGE IN VOLTS

R13 IN OHMS

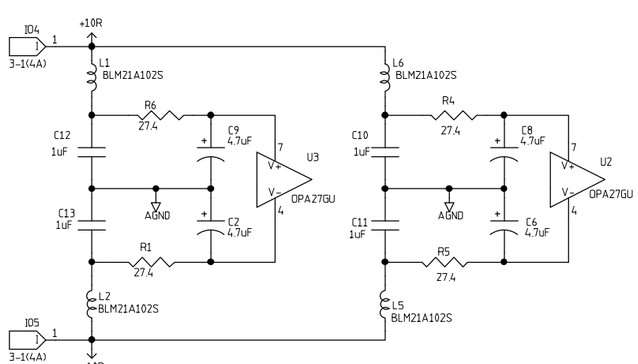

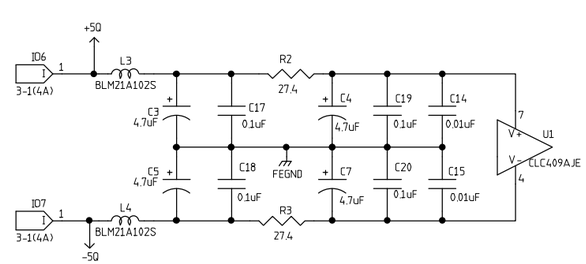

	NAME	DATE
ORIGINATOR	MERLE HALDEMAN	11/13/98
DRAWN	BRUCE MERKEL	11/13/98
CHECKED	TOM CRENNA	1/6/99
APPROVED		

FERMILAB PPD/ETT/ES CDMS (E-891)
ZIP MODULE
SQUID VARIABLE GAIN AMP

SIZE	FSCM NO.	DWG. NO.	REV
C			
SCALE		SHEET 3-3	