REVISIONS			
REV	DESCRIPTION	DATE	APPROVED

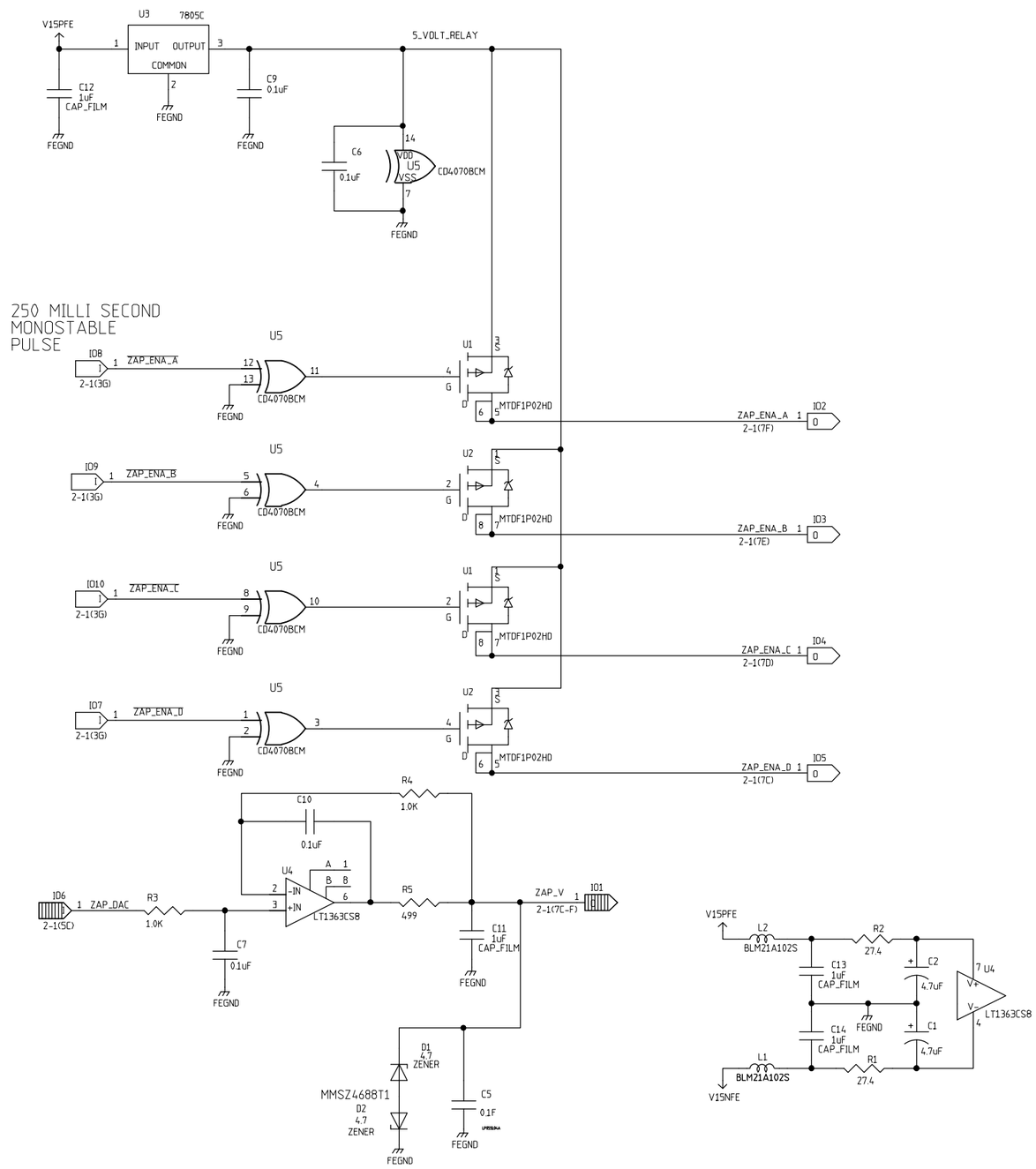

REVISED 9/21/99 BRUCE MERKEL

	NAME	DATE
ORIGINATOR	MERLE HALDEMAN	11/17/98
DRAWN	BRUCE MERKEL	11/17/98
CHECKED	TOM CRENNA	1/6/99
APPROVED		

FERMILAB PPD/ETT/ES CDMS (E-891)
ZIP MODULE
SQUID ZAP CONTROL

SIZE	FSCM NO.	DWG. NO.	REV
C			1
SCALE		SHEET 4-1	