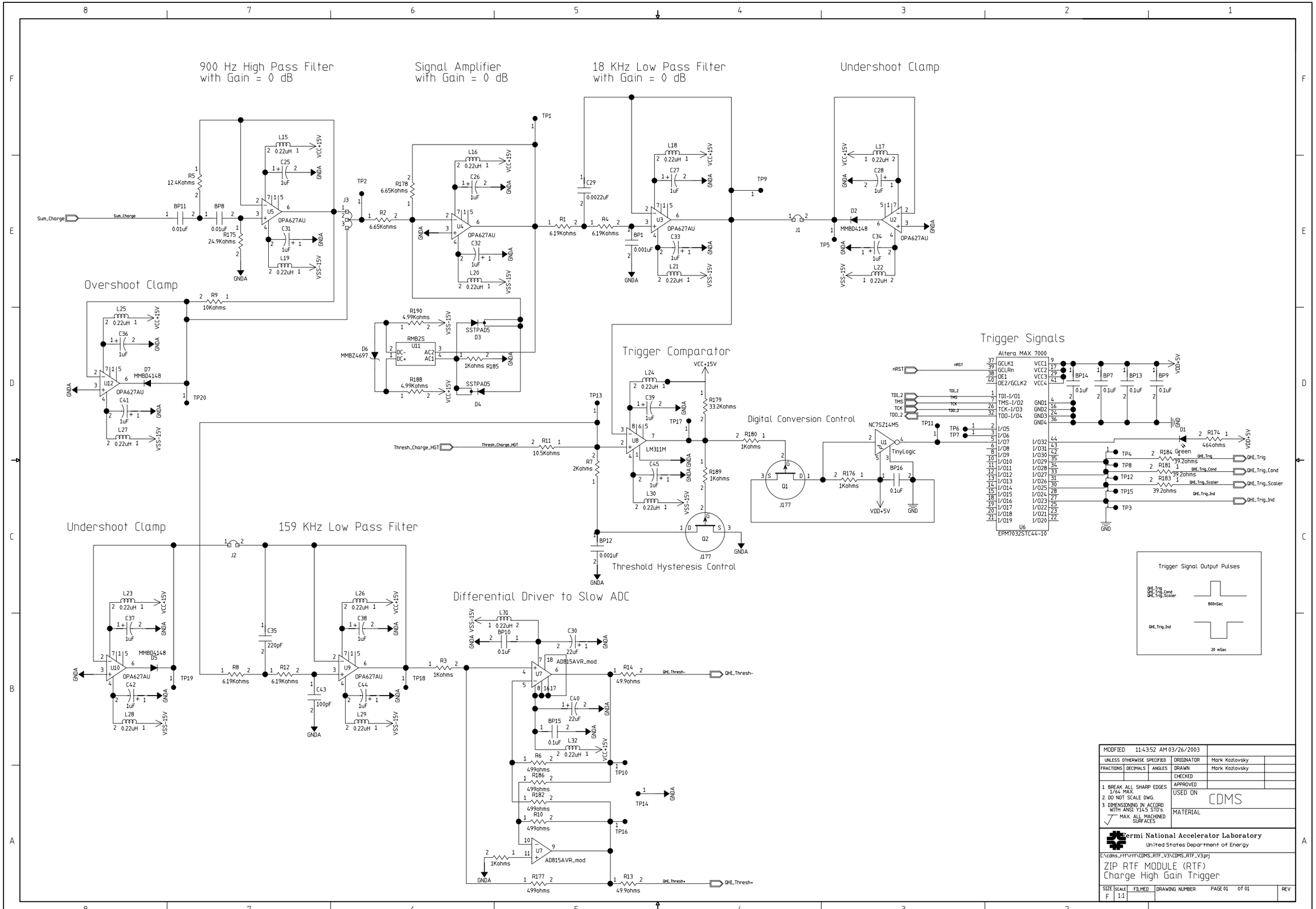
900 Hz High Pass Filter with Gain = 0 dB
Signal Amplifier with Gain = 0 dB
18 KHz Low Pass Filter with Gain = 0 dB
Undershoot Clamp
Overshoot Clamp
Trigger Comparator
Digital Conversion Control
Trigger Signals
Undershoot Clamp
159 KHz Low Pass Filter
Differential Driver to Slow ADC
Threshold Hysteresis Control
Trigger Signal Output Pulses
Sum_Charge
Thresh_Charge_HGT
OPA627AU
LM311M
ADB15AVR_mod
NC7SZ14M5
TinyLogic
Altera MAX 7000
EPM7032STC44-10
QHI_Trig
QHI_Trig_Cond
QHI_Trig_Scaler
QHI_Trig_Ind
QHI_Thresh-
QHI_Thresh+
800nSec
20 mSec
MODIFIED 11:43:52 AM 03/26/2003
UNLESS OTHERWISE SPECIFIED
FRACTIONS DECIMALS ANGLES
ORIGINATOR Mark Kozlovsky
DRAWN Mark Kozlovsky
CHECKED
APPROVED
1. BREAK ALL SHARP EDGES 1/64 MAX.
2. DO NOT SCALE DWG.
3. DIMENSIONING IN ACCORD WITH ANSI Y14.5 STD'S.
MAX. ALL MACHINED SURFACES
USED ON CDMS
MATERIAL
Fermi National Accelerator Laboratory
United States Department of Energy
C:\cdms_rtf\rtf\CDMS_RTF_V3\CDMS_RTF_V3.prj
ZIP RTF MODULE (RTF)
Charge High Gain Trigger
SIZE F SCALE 1:1 FILMED DRAWING NUMBER PAGE 01 of 01 REV